# AXION COMPACT Manual


**Specifications**
**About the device**
- Description
- Package Contents
- Features
- Components and Controls

**Power Supply**
- Precautions
- Recommendations for Battery Use
- Battery Charging
- Battery Installation
- External Power Supply

**Getting Started**
- Powering on and Image Settings
- Button Operation

**Interface**
- Status Bar
- Quick Menu
- Main Menu:
- Enter the Main Menu
- Amplification Level
- Colour Modes
- Smoothing Filter
- User Mode
- Display Settings
- PiP Mode
- Wi-Fi Settings
- Microphone
- Calibration Mode
- General Settings
- Defective Pixel Repair
  - Defective Pixel Repair
  - Restore Default Pixel Map
- Device Information

**Functions**
- Video Recording And Photography
- Discrete Digital Zoom
- PIP Function
- Display-Off Function

Wi-Fi Function
Stadiametric Rangefinder
USB Connection
**Software**
Stream Vision 2
Firmware Update
**Maintenance**
Technical Inspection
Technical Maintenance and Storage
**Troubleshooting**
The device does not turn on
Device malfunction
The device does not operate from an external power source
The image is blurry, with vertical stripes or an uneven background
Black screen after calibration
When the device is turned on, the calibration frequency is at first higher, then decreases (if the automatic calibration mode is enabled)
Poor quality image. There is noise or ghost images of previous scenes or objects
The image is too dark
Poor image quality / Detection range reduced
Smartphone or tablet PC cannot be connected to the device
Wi-Fi signal is missing or interrupted
Color bars appear on the display or the image disappears
The image quality during the device operation at below zero temperatures is worse than at positive temperatures
The image of the object being observed is missing
The supplied USB cable is broken
**Legal Compliances and Disclaimers**

# Specifications

| **Model** | **XG30 Compact** |
|---|---|
| SKU | 77508 |
| **Microbolometer** | |
| Type | uncooled |
| Resolution, Pixels | 640×480 |
| Pixel Pitch, µm | 12 |
| Sensor NETD, mK | < 40 |
| System NETD, mK | < 25 |
| Frame Rate, Hz | 50 |
| **Optical Characteristics** | |
| Optical Magnification, x | 2 |
| Smooth Digital Zoom | 2-16 |
| Digital Zoom, x | x1, x2, x4, x8 |
| Relative Aperture, D/f’ | 1.2 |
| Minimum Observation Distance, m/y | 5/5.47 |
| Eye Relief, mm | 14/0.55 |
| Exit Pupil Diameter, mm | 4/0.16 |
| Angular Field of View (Horizontal x Vertical), degree | 14.6×9.2 |
| Linear Field of View (Horizontal x Vertical), m at 100 m | 25.6×16.0 |
| Eyepiece Focus Range, Diopter | +4 / -5 |
| Detection Distance for Deer-Sized Objects, m/y | 1300/1422 |

| | |
|---|---|
| **Display** | |
| Type | AMOLED |
| Resolution, Pixels | 640×400 |
| **Operational Characteristics** | |
| Power Supply, V | 3 – 4.2 |
| Battery Type/Capacity/Nominal Output Voltage | APS 3 Li-ion Battery Pack / 3200 mAh / DC 3.7 V |
| External Power Supply | 5 V (USB Type-C) |
| Battery Run Time at t=22°C, hours* | 7 |
| Degree of Protection, IP Code (IEC60529) | IPX7 |
| Operating Temperature Range, °C / °F | -25 ... +40 / -13 – +104 |
| Dimensions, mm/inch | 144×41×69 / 5.67×1.6×2.72 |
| Weight (with battery), kg/oz | 0.31/10.9 |
| **Video Recorder** | |
| Photo/Video Resolution, Pixels | 960x600 |
| Video/Photo Format | .mp4 / .jpg |
| Built-in Memory | 64 GB |
| **Wi-Fi Channel**** | |
| Frequency | 2.4/5 GHz |
| Standard | IEEE 802.11 b/g/n/ac |

*Actual operating time will depend to what extent the Wi-Fi and built-in video recorder is used.

**Reception range may vary depending on various factors: obstacles, other Wi-Fi networks.

# About the device

# Description

**Axion Compact** thermal imaging monoculars are designed for use both at night-time and during the day in difficult weather conditions (fog, smog, rain), as well as where obstacles are present that impede the detection of a target (branches, tall grass, dense shrubs etc.).

Unlike night-vision devices that are based on electron-optical converters, thermal vision monoculars do not require an external light source and are resistant to the effects of bright light.

**Axion Compact** monoculars can be used for night-time hunting, observation and terrain orientation, and carrying out rescue operations.

---

Battery Charging

Battery Installation

Powering on and Image Setting

Stream Vision 2

# Package Contents

- Axion XG Thermal Imager

- APS 3 rechargeable battery
- Power Adapter
- USB Type-C cable with USB Type-A adapter
- Carrying case
- Hand strap
- Quick User Manual
- Lens-cleaning cloth
- Warranty sheet

# Features

- Microbolometer pixel size is 12 microns
- 640×400 AMOLED display resolution
- Compact size and light weight
- Functional and ergonomic design
- 9 color modes
- Three calibration modes: Manual, Semi-Automatic, Automatic
- Three levels of sensitivity enhancement: Normal, High, Ultra
- Stadiametric Rangefinder
- Display Off function
- Display dimming function
- Auto shutdown function
- Device firmware update using the free Stream Vision 2 App
- Defective pixel repair function
- Updatable firmware
- Wide operating temperature range (-25°C to +40°C / -13°F to +104°F)
- Fully waterproof (IPX7 rated)
- Video streaming via USB Type-C

**Video/Audio Recording**

- Built-in video and sound recorder
- Integration with iOS and Android devices
- Wi-Fi remote control and viewing using a smartphone

- Storing photos and videos in Cloud when using the Stream Vision 2 App

**Battery Pack**

- Quick Change Li-Ion Battery Pack APS 3
- Charging from USB Power Bank

# Components and Controls

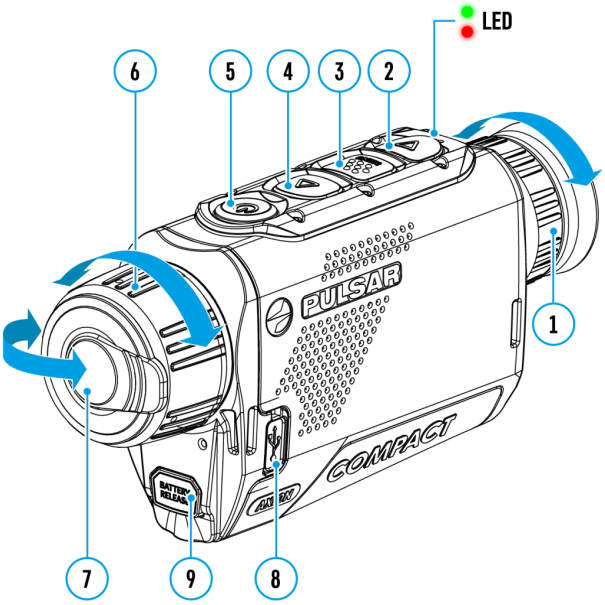


1. Eyepiece focus ring
2. DOWN/REC button
3. MENU button
4. UP/ZOOM button
5. Power ON/OFF/CALIBRATION button
6. Lens focus ring
7. Lens cover
8. USB Type-C connector
9. Battery release button

LED indicator displays the current status of the device:

| LED Indicator | Operating Mode |
|---|---|
| ● | Device is turned on |
| ✸ | The device is turned on/video recording |
| ● | The device is turned on/battery charge < 10% |
| ✸ | The device is turned on/video recording/battery charge < 10% |

# Power Supply

# Precautions

- Always use the APS charger (purchased separately) to charge APS 3 batteries. Using an unsuitable charger can cause irreparable damage to the battery and fire.
- Do not charge the battery immediately after bringing it from cold to warm. Wait at least 30 minutes for the battery to warm up.
- It is not recommended to charge the batteries with a charger connected to the USB port of a computer or laptop. It can damage the computer.
- Do not leave the battery unattended while charging.
- Do not use the charger if it has been modified or damaged.
- Do not leave the battery in a charger connected to the mains after charging is complete.
- Do not expose the battery to high temperatures or naked flames.
- Do not use the battery as a power source for devices that do not support APS 3 batteries.
- Do not disassemble or deform the battery or charger.
- Do not drop or strike the battery or charger.
- The battery and charger must not be immersed in water.
- Keep the battery out of the reach of children.

# Recommendations for Battery Use

- The battery should be partially charged (50 to 80 %) for long-term storage.
- The battery is to be charged at an ambient temperature of 0 °C to +35 °C or the lifespan of the battery will decrease significantly.

- When using the battery at sub-zero ambient temperatures, the battery capacity decreases. This is normal and not a defect.
- Do not use the battery at temperatures outside the range of -25 °C to +40 °C or it may reduce battery life.
- The battery is short circuit protected. However, any situation that may cause short-circuiting should be avoided.

# Battery Charging

The **Axion Compact** thermal imager comes with an APS 3 rechargeable Lithium-ion battery. Before first use, make sure the battery is fully charged.

The icon in the status bar will flash when the battery is low. The battery needs to be charged.

---

**Option 1**

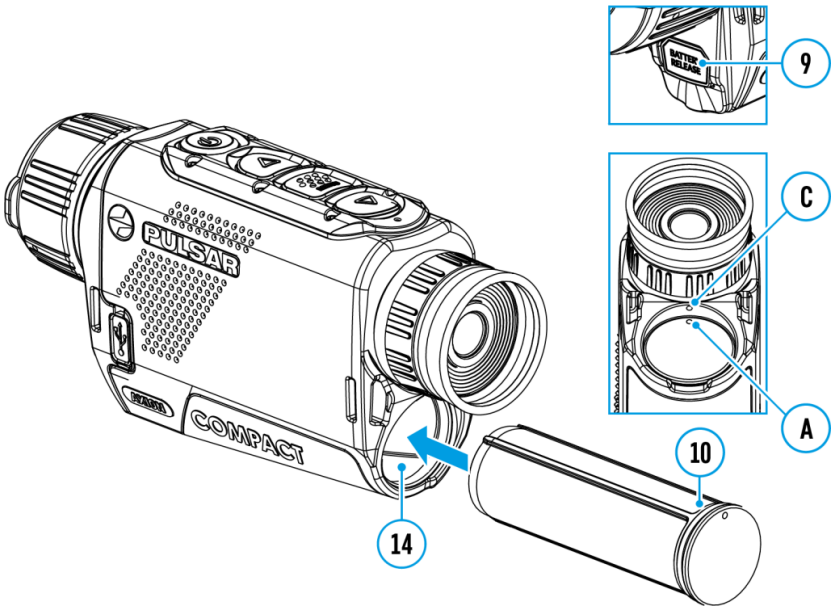

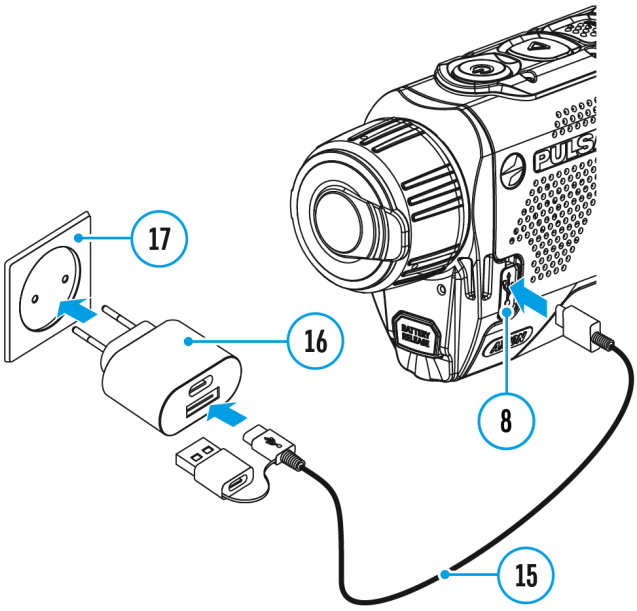


1. Install the battery **(10)** into its slot on the device case **(14)** by aligning the icons to form a 'dot' on the unit and the battery.
2. Attach a USB cable **(15)** to the USB Type-C connector **(8)** on the device.
3. Connect the other end of the USB cable **(15)** to the power adapter **(16)** by removing the USB Type-A adapter.
4. Connect the power adapter **(16)** to the mains power supply **(17)**.
5. Wait until the battery is fully charged (indication in the status bar: 100 )

---

### Option 2

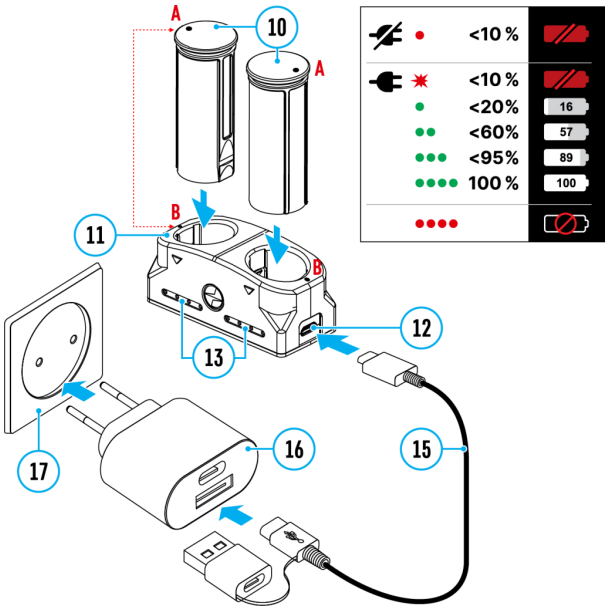


1. Insert the battery **(10)** fully along the guide rail into the APS charger* **(11)** slot as far as it will go.

2. Point **A** on the battery and Point **B** on the charger should be aligned.
3. Two batteries* can be charged at the same time – a second slot is provided for this.
4. Attach the USB Type-C plug on the USB cable **(15)** to the USB Type-C connector on the power adapter **(16)**. Plug the device into a 100–240V power outlet **(17)**.
5. Attach the second plug of the USB cable to the socket **(12)** of the charger **(11)**.
6. The LED indicator **(13)** will light up battery charge status (see table).
7. Wait until the battery is fully charged (LED indication **(13)**: ●●●● ).

| (13) LED Indicator** | Battery charge status |
|---|---|
| ● | Battery charge from 0 to 10%. Charger not connected to the mains power supply |
| ✸ | Battery charge from 0 to 10%. Charger connected to the mains power supply |
| ●●●● | Battery defective. **Do not use the battery!** |
| ● | Battery charge from 10 to 20% |
| ●● | Battery charge from 20 to 60% |
| ●●● | Battery charge from 60 to 95% |
| ●●●● | Battery completely charged. Charging will automatically stop. The battery can be disconnected from the charger. |

* Available separately

**The indicator displays the current level of charge of the battery for 30 seconds when the APS charger is not plugged in. When the power is connected, the display shows the current status of the battery constantly, the LEDs additionally flickering to indicate the battery charging process.

# Battery Installation

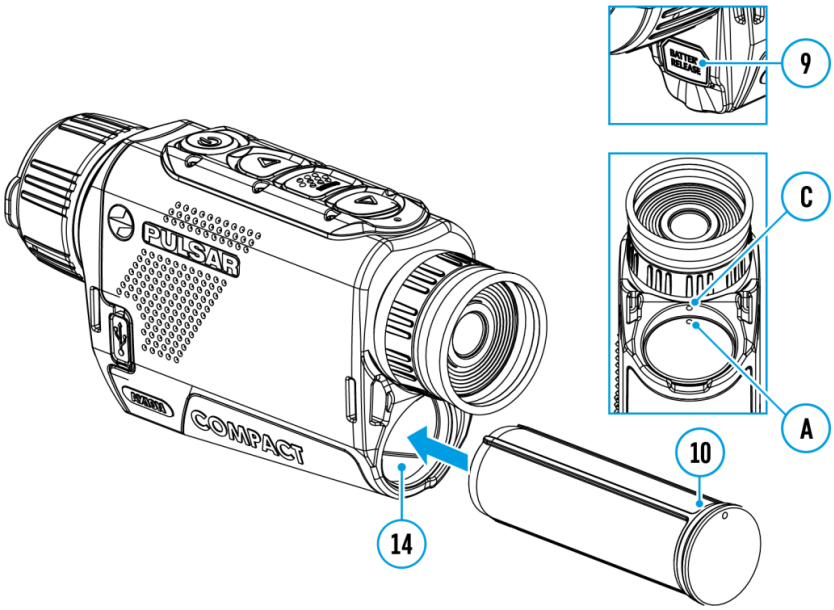


**Attention!** Before installing the battery, make sure that there is an undamaged rubber insulating ring on the battery. The ring is designed to protect your device from moisture getting inside. Damage to the device due to a missing ring is not covered by the warranty. To replace or purchase a ring, contact your **local distributor.**

1. Insert the battery **(10)** into the assigned slot on the device's casing **(14)**, aligning the images to form a 'dot' on the device **(C)** and the battery **(A)**.
2. When properly installed, the battery is locked into the slot with a special catch inside the battery compartment.
3. To remove the battery from the device, press the Battery Release button **(9)**.

# External Power Supply

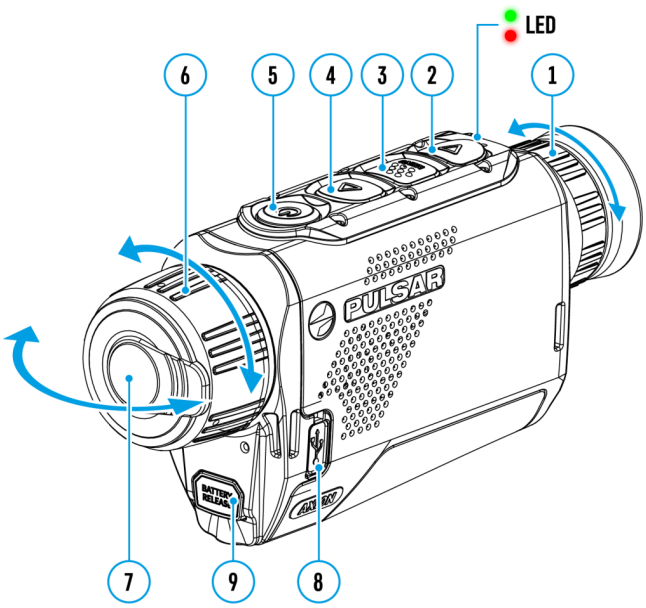


Power can be supplied from an external source such as a 5 V power bank.

1. Attach the external power source to the device's USB Type-C connector **(8)**.
2. The device will switch to operation from the external power source, while the APS3 battery will be gradually recharged.
3. An icon of a battery 100 will appear on the display showing its charge as a percentage.
4. If the device is operated from an external power source and the APS3 battery is not connected, an icon 100 is displayed.
5. When the external power supply is disconnected, the device switches to the internal power supply without the device powering off.

**Important!** Power Bank must be connected to the device with the battery installed.

**Attention!** Charging the built-in battery and the APS3 battery from the power bank at an external temperature below 0 °C (32 °F) can reduce the battery life. When using external power, connect the Power Bank to the device after it has been turned on and working for several minutes.

# Getting Started

## Powering on and Image Settings

1. Remove the lens cover **(7)**. Secure the cover to the strap using the magnet built into the cover.
2. Turn the device on with a short press of the **ON/OFF (5)**
3. Adjust the resolution of the icons on the display by rotating the diopter adjustment ring on the eyepiece **(1)**.
4. To focus on the object under observation, rotate the lens focus ring **(6)**.
5. Select the desired **calibration mode** in the main menu: Manual **(M)**, Semi-automatic **(SA)** or Automatic **(A)**.
6. Calibrate the image with a short press of the **ON/OFF (5)** button (where calibration mode **SA** or **M** has been selected). Close the lens cap before manual calibration.
7. Select the required **amplification level** (**"Normal"** N, **"High"** H, **"Ultra"** U) by briefly pressing the **UP (4)** button.
8. Activate the quick menu by briefly pressing the **MENU (3)** button to adjust the brightness, contrast and smooth digital zoom (for more details see the **Quick Menu** section).
9. Turn the device off with a long press of the **ON/OFF (5).**

---

**Recommended:** When using the device for the first time, it is recommended to connect to the Stream Vision 2 App and check for firmware updates. If a newer version is available, you should update the firmware.

**Observation conditions:** time of day, weather, different observation objects affect the image quality. Custom settings for brightness, display contrast as well as the function of adjusting the microbolometer sensitivity level will help to achieve the desired quality in a particular situation.

**Attention!** It is forbidden to point the monocular lens at intensive energy sources, such as laser radiation emitting devices or the sun. It can disable the monocular electronic components. Warranty does not cover damage arising from failure to comply with the operating rules.

# Button Operation

| Operation | Button |
|---|---|
| Power device on | ⏻ short press |
| Power device off | ⏻ long press for 3 secs |
| Turn display off | ⏻ long press for less than 3 secs |
| Turn display on | ⏻ short press |
| Calibrate the microbolometer | ⏻ short press |
| Switching amplification levels | △ short press |
| Control discrete digital zoom | △ long press |
| **Video Recorder** | **Button** |
| Start/pause/resume video recording | ▽ short press |
| Stop video recording | ▽ long press |
| Switch to video / photo | ▽ long press |
| Capture a photo | ▽ short press |
| **Main Menu** | **Button** |
| Enter main menu | MENU long press |
| Navigation upwards/rightwards | △ short press |
| Navigation downwards/leftwards | ▽ short press |
| Confirm selection | MENU short press |

| | |
|---|---|
| Exit submenu without confirming selection | MENU long press |
| Exit menu (switch to viewing mode) | MENU long press |

| **Quick Menu** | **Button** |
|---|---|
| Enter quick menu | MENU short press |
| Switch between quick menu options | MENU short press |
| Increase value | △ short press |
| Decrease value | ▽ short press |
| Exit quick menu | MENU long press |

# Interface

## Status Bar

The status bar is at the bottom of the display and displays information on the actual operating status of the device, including:

- Color Mode:

  – White hot

  – Black hot

- Amplification level
- Smoothing Filter (displayed when the function is on)
- Calibration Mode (in Automatic calibration mode a countdown timer :05 will appear instead of the calibration mode icon 5 seconds before automatic calibration begins).
- Magnification
- Microphone
- Wi-Fi Connection
- Time
- Power Indication:

  100 – charge level if the device is powered by a battery

  100 – charge level if the device is charging and powered by a battery

  100 – the device operates on an external power supply but is not charging

  – low battery charge

# Quick Menu

The basic settings (adjusting brightness and contrast, using the Stadiametric Rangefinder function) can be changed using the quick access menu.

---

- Enter the menu by briefly pressing the **MENU (3).**
- A short press of the **MENU (3)** button enables you to toggle between functions, as described below.

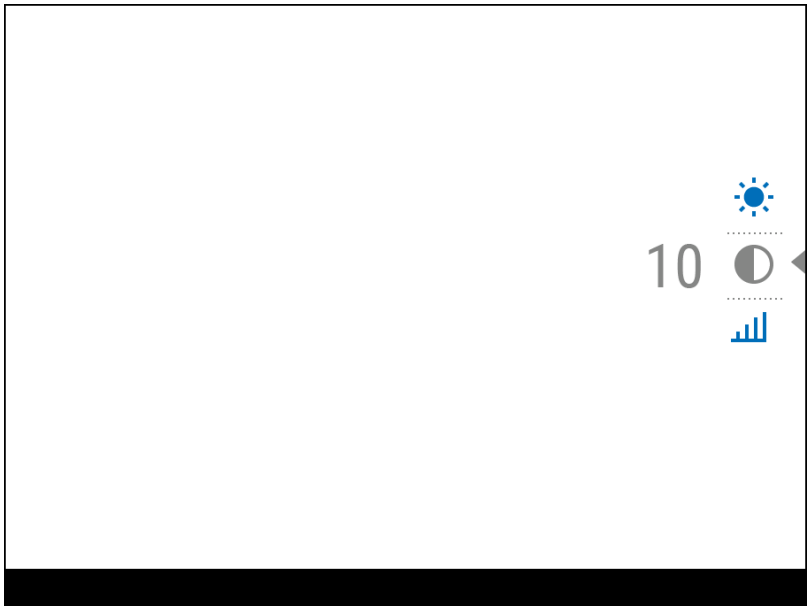


**Brightness** – press the **UP (4)/DOWN (2)** buttons to change display brightness from 0 to 20.

**Contrast** – press the **UP (4)/DOWN (2)** buttons to change image contrast from 0 to 20.

- When the device is restarted, the brightness and contrast values are reset to the default values for the selected colour palette.
- To maintain brightness and contrast settings when changing amplifying levels, activate User Mode.

**Stadiametric Rangefinder** – change the position of special marker lines to determine the distance to the object being observed by pressing the **UP (4)/DOWN (2)** buttons (for more details see the Stadiametric Rangefinder section).

**Smooth Digital Zoom** – press the **UP (4)/DOWN (2)** button to change the value of the digital zoom from 2 to 16. The digital zoom changes in 0.1 increments.

*Note:* the magnification value is reset to the base value when the device is switched off

- Press and hold the **MENU (3)** button to exit the menu or wait for 10 seconds to exit automatically.

# Main Menu:

# Enter the Main Menu

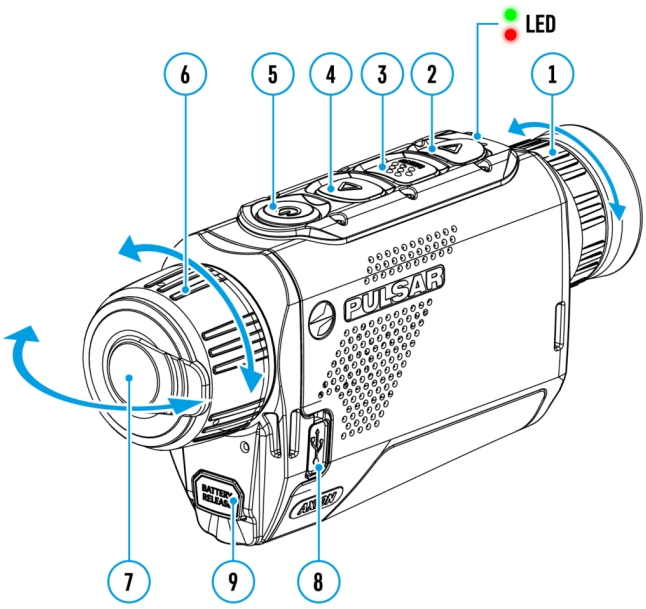


1. Enter the main menu with a long press of the **MENU (3)** button.
2. Press the **UP (4)/DOWN (2)** buttons to move through the menu items.
3. Press the **MENU (3)** button briefly to select the menu item.
4. Press and hold the **MENU (3)** button to exit the menu or wait for 10 seconds to exit automatically.

5. Automatic exit takes place after 10 seconds of inactivity.

*Note:* When entering the main menu, the background image darkens to enhance the menu visibility. This is normal and not a defect.

**General View of Menu**

**Tab 1**

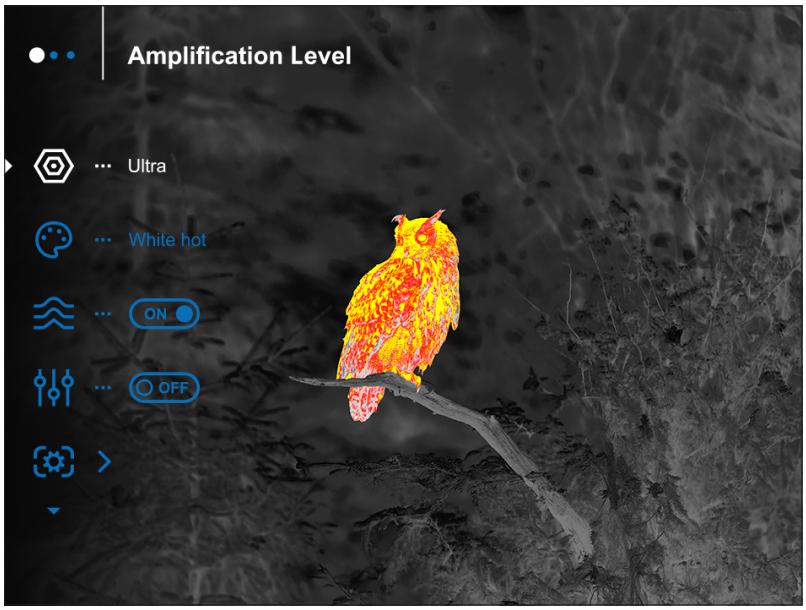


**Tab 2**

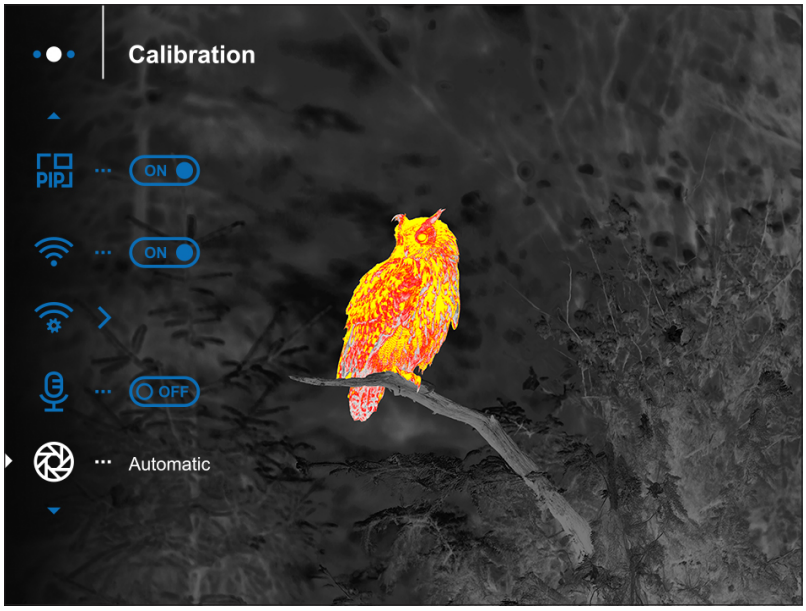


**Tab 3**

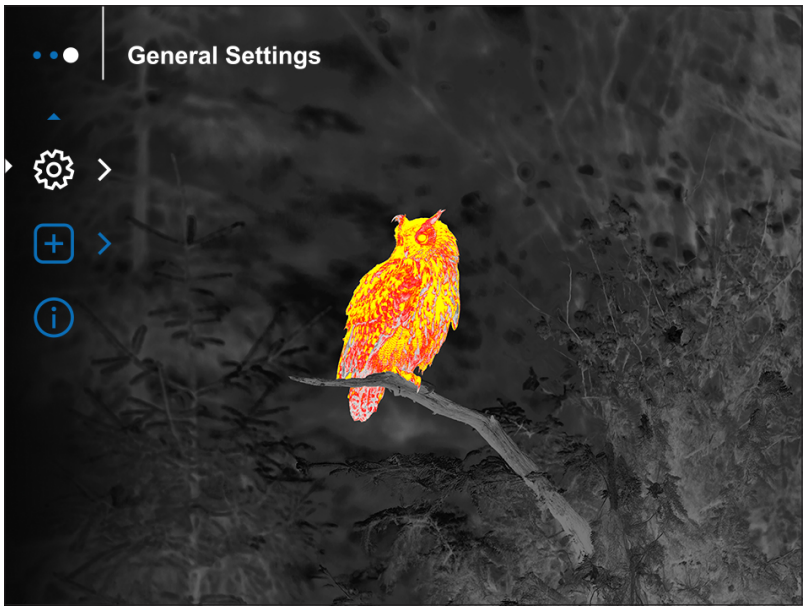


# Amplification Level

The Normal N, High H, Ultra U sensitivity enhancement features are the latest in software algorithm offerings from Pulsar that enhance the quality of detection and object recognition, regardless of observation conditions. When the temperature contrast decreases due to conditions such as fog, precipitation or high humidity, increasing the amplification level can optimize the image picture.

To reduce digital distortion, activate the Smoothing Filter in the main menu.

Normal

High

Ultra

**Option 1:**

Press the **UP/ZOOM (4)** button briefly to switch the amplification level.

**Option 2:**

1. Press and hold the **MENU (3)** button to enter the main menu.
2. Use the **UP (4)/DOWN (2)** buttons to select the **Amplification Level** icon.
3. Press the **MENU (3)** button briefly to enter the Amplification Level submenu.
4. Use the **UP (4)/DOWN (2)** buttons to select one of three amplifying levels of sensitivity (Normal N, High H, Ultra U).
5. Press the **MENU (3)** button briefly to confirm the selection.

# Colour Modes

Colour palette selection

White hot is the default display mode.

To select an alternative palette, do the following:

1. Press and hold the **MENU (3)** button to enter the main menu.
2. Use the **UP (4)/DOWN (2)** buttons to select **Colour Modes** icon.
3. Press the **MENU (3)** button briefly to enter the submenu.
4. Use the **UP (4)/DOWN (2)** buttons to select the desired palette.
5. Press the **MENU (3)** button briefly to confirm the selection.

*Tip:* to preserve brightness and contrast values when switching palettes, activate User Mode.

---

- **White Hot** – a black and white palette where black = cold; white = hot
- **Black Hot** – a black and white palette where white = cold; black = hot
- **Green**
- **Red Hot**
- **Red Monochrome**
- **Rainbow**
- **Ultramarine**
- **Violet**
- **Sepia**

---

**Attention!** The device should not be used to accurately measure temperature. The images generated are based on temperature contrast rather than true temperature readings.

# Smoothing Filter

Used to reduce digital distortion while maintaining a high level of sensitivity.

**Smoothing Filter Off**

**Smoothing Filter On**

1. Press and hold the **MENU (3)** button to enter the main menu.
2. Use the **UP (4)/DOWN (2)** buttons to select the **Smoothing Filter** icon.
3. Press the **MENU (3)** button briefly to turn the filter on/off.

# User Mode

The User Mode function saves selected brightness and contrast settings in the device's memory providing optimal image quality for the next use of the thermal imager immediately, with no additional adjustments needed.

1. Press and hold the **MENU (3)** button to enter the main menu.
2. Use the **UP (4)/DOWN (2)** buttons to select the **User Mode** icon.
3. Press the **MENU (3)** button briefly to turn the mode on/off.

# Display Settings

1. Press and hold the **MENU (3)** button to enter the main menu.
2. Use the **UP (4)/DOWN (2)** buttons to select the **Display Settings** menu item.
3. Press the **MENU (3)** button briefly to enter the submenu.

---

### Display dimming

The dimming function is designed to reduce the brightness of the display when using the device in the dark to reduce eye strain.

The Overlay Brightness value in dimming mode will be retained when the function is turned on again.

- Press the **MENU (3)** button to select *On* for turning on the function or *Off* for turning it off.

---

### Overlay Brightness

Adjust brightness level of the icons and screensavers (Pulsar, Display off) on the display.

1. Press and hold the **MENU (3)** button to enter the main menu.
2. Use the **UP (4)/DOWN (2)** buttons to select the **Overlay Brightness** icon.
3. Press the **MENU (3)** button briefly to enter the submenu.
4. Use the **UP (4)/DOWN (2)** buttons to select the desired brightness level from 0 to 10.
5. Press the **MENU (3)** button briefly to confirm the selection.

---

### Screen shape

1. Use the **UP (4)/DOWN (2)** buttons to select the **Screen shape** icon.
2. Press the **MENU (3)** button briefly to enter the submenu.
3. Use the **UP (4)/DOWN (2)** buttons to select the desired screen shape: rectangular, rounded or circular. The default screen shape is rectangular.
4. Press the **MENU (3)** button briefly to confirm the selection.

# PiP Mode

Picture in Picture mode

1. Press and hold the **MENU (3)** button to enter the main menu.
2. Use the **UP (4)/DOWN (2)** buttons to select the **PiP Mode** icon.
3. Press the **MENU (3)** button briefly to turn on/off.

# Wi-Fi Settings

This item enables you to set up your device for operation in a Wi-Fi network.

1. Press and hold down the **MENU (3)** button to enter the main menu.
2. Select the **Wi-Fi Settings** menu option with the **UP (4)/DOWN (2)** buttons.
3. Press briefly the **MENU (3)** button to enter submenu.
4. Select the desired menu item with the **UP (4)/DOWN (2)** buttons.

**Wi-Fi Activation**

Turning Wi-Fi on/off

1. Use the **UP (4)/DOWN (2)** buttons to select the **Wi-Fi Activation** icon.
2. Press the **MENU (3)** button briefly to turn **Wi-Fi** on/off.

**Password Setup**

This menu option allows you to set a password to access your thermal imager from an external device.

The password is used to connect an external device (i.e. smartphone) to your thermal imager.

1. Enter the **Password Setup** PAS submenu with a short press of the **MENU (3)** button.
2. The unique password only for your device will appear on the image.
3. Set the desired password with the **UP (4)/DOWN (2)** buttons. Switch between digits with a short press of the **MENU (3)** button.
4. Save the password and exit the submenu with a long press of the **MENU (3)** button.

**Access Level Setup**

This option allows you to configure the appropriate access level to your device made available to the Stream Vision 2 application.

- **Owner** level**.** A Stream Vision 2 user has full access to all device functions.
- **Guest** level**.** A Stream Vision 2 user only has access to the real time video stream from the device.

1. Press briefly the **MENU (3)** button to enter the **Access Level Setup** submenu.
2. Select the access level with the **UP (4)/DOWN (2)** buttons.
3. Press and hold the **MENU (3)** to confirm your selection and exit from the submenu.

**Wi-Fi Band**

This setting helps to solve smartphone connection issues in the following cases:

- If your smartphone does not support 5 GHz Wi-Fi band, switch to 2.4 GHz.
- Many Wi-Fi networks cause interference. In this case, switching between Wi-Fi bands can improve the connection between the device and the smartphone.

1. Press briefly the **MENU (3)** button to enter the **Wi-Fi Band** submenu.
2. Press the **UP (4)/DOWN (2)** buttons to select the Wi-Fi bandwidth – **5 GHz** or **2.4 GHz**.
3. Confirm your selection with a short press of the controller **MENU (3)** button.

# Microphone

Turning microphone on/off

This item allows you to enable (or disable) the microphone for recording sound during video recording.

1. Press and hold the **MENU (3)** button to enter the main menu.
2. Use the **UP (4)/DOWN (2)** buttons to select **Microphone** icon.
3. Press the **MENU (3)** button briefly to turn on / off.

The microphone is off by default.

# Calibration Mode

Calibration mode selection.

Calibration enables the device to equalize the microbolometer background temperature and eliminate the image flaws (such as vertical bars, phantom images, etc.).

There are three calibration modes: **Manual, Semi-Automatic** and **Automatic**.

The selected calibration mode is displayed in the status bar (see Status Bar section).

Select the required mode in the Calibration Mode menu item:

1. Press and hold the **MENU (3)** button to enter the main menu.
2. Use the **UP (4)/DOWN (2)** buttons to select the **Calibration Mode** icon.
3. Press the **MENU (3)** button briefly to enter the submenu.
4. Use the **UP (4)/DOWN (2)** buttons to select one of the calibration modes described below.
5. Press the **MENU (3)** button briefly to confirm the selection.

---

### M mode (Manual)

- Close the lens cover **(7)**.
- Press the **ON/OFF (5)** button briefly.
- Open the lens cover **(7)** after the calibration is completed.

### SA mode (Semi-Automatic)

- The user independently determines the need for calibration (according to the image being observed).
- Press the **ON/OFF (5)** button briefly to activate calibration.
- There is no need to close the lens cover because an internal shutter covers the microbolometer automatically.

### A mode (Automatic)

- The device is calibrated autonomously according to firmware algorithms.
- There is no need to close the lens cover because an internal shutter covers the microbolometer automatically.
- In this mode, the user can still choose to calibrate the device using the **ON/OFF (5)** button if required (as in the **SA** mode).
- In Automatic calibration mode a countdown timer :05 will appear instead of the calibration mode icon 5 seconds before automatic calibration begins.

---

*Notes:*

- During calibration, the image on the display briefly freezes for up to 1 second.
- The selected calibration mode is saved after restarting the device.

# General Settings

1. Press and hold down the **MENU (3)** button to enter the main menu.
2. Select option **General Settings** with the **UP (4)/DOWN (2)** buttons.
3. Press briefly the **MENU (3)** button to confirm.

The following settings are available:

---

## Language

Language selection:

1. Select option **Language** with the **UP (4)/DOWN (2)** buttons.
2. Press briefly the **MENU (3)** button to confirm.
3. Select one of the available interface languages with a short press of the **UP (4)/DOWN (2)** buttons: English, German, Spanish, French, Russian, Italian, Portuguese, Dutch, Danish, Norwegian, Swedish, Polish, Czech, Hungarian, Bulgarian, Finnish, Lithuanian, Latvian, Ukrainian.
4. Save selection and exit the submenu with a long press of the **MENU (3)** button.

---

## Date

Date setup

1. Select option **Date** with **UP (4)/DOWN (2)** buttons.
2. Enter the submenu with a short press of the **MENU (3)** button. The date format is displayed as: YYYY/MM/DD (year/month/day).
3. Select the correct values for the year, month and date with a short press of the **UP (4)/DOWN (2)** buttons.
4. Switch between digits with a short press of the **MENU (3)** button.
5. Save the selected date and exit the submenu with a long press of the **MENU (3)** button.

---

## Time

Time setup:

1. Select option **Time** with **UP (4)/DOWN (2)** buttons.
2. Enter the submenu with a short press of the **MENU (3)** button.
3. Select the desired time format with a short press of the **UP (4)/DOWN (2)** buttons: 24 or PM/AM.
4. Switch to hour setup with a short press of the **MENU (3)** button.
5. Select hour value with a short press of the **UP (4)/DOWN (2)** buttons.
6. Switch to minute setup with a short press of the **MENU (3)** button.
7. Select minute value with a short press of the **UP (4)/DOWN (2)** buttons.
8. Save the selected time and exit the submenu with a long press of the **MENU (3)** button.

---

## Units of Measure

Selection of units of measure:

1. Select option **Units of Measure** with **UP (4)/DOWN (2)** buttons.
2. Enter the submenu with a short press of the **MENU (3)** button.
3. Select the desired units of measurement with a short press of the **UP (4)/DOWN (2)** buttons: Meters or Yards.
4. Save the selection with a short press of the **MENU (3)** button.
5. Menu exit will take place automatically.

---

## Auto Shutdown Options

When this feature is enabled, the device automatically turns off after 30 minutes of inactivity in Display off mode.

1. Use the **UP (4)/DOWN (2)**buttons to select **Auto Shutdown Options** .
2. Press the **MENU (3)** button to enter the submenu.
3. Press **MENU (3)** button to select *On* for turning on the function **Device inactivity shutdown** or *Off* for turning it off.

---

## Default Settings

This menu option allows you to return the settings to their defaults.

1. Select option **Default Settings** with **UP (4)/DOWN (2)** buttons.
2. Enter the submenu with a short press of the **MENU (3)** button.
3. With a short press of the **UP (4)/DOWN (2)** buttons select *"Yes"* to restore default settings or *"No"* to abort.
4. Confirm selection with a short press of the **MENU (3)** button.

- If *"Yes"* is selected the display will show *"Return default settings?"* with *"Yes"* and *"No"* dialogue options.
- Select *"Yes"* to restore default settings. If *"No"* is selected the action is aborted and you return to the submenu.

The following settings will be returned to their defaults before being changed by the user:

- **Video Recorder Operating Mode** – Video
- **Amplification Level** – High
- **Smoothing Filter** – On
- **User Mode** – Off
- **Calibration Mode** – Automatic
- **Language** – English
- **Microphone** – Off
- **Wi-Fi** – Off (default password)
- **Wi-Fi access level** – owner
- **Magnification** – Off (without digital zoom)
- **PiP** – Off
- **Colour Mode** – White Hot
- **Units of measurement** – Meters
- **Wi-Fi Band –** 2.4 GHz
- **Display dimming** – Off
- **Device inactivity shutdown** – On
- **Screen shape** – Rectangular

**Warning:** The date and time settings and default pixel map are not restored.

### Format

This menu option allows you to format the Flash memory card. All files will be deleted.

Formatting should be carried out in case of a memory card error.

Before formatting, make sure you transfer all footage to other media.

1. Select option **Format** with **UP (4)/DOWN (2)** buttons.
2. Enter the submenu with a short press of the **MENU (3)** button.
3. With a short press of the **UP (4)/DOWN (2)** buttons select *"Yes"* to format the memory card or *"No"* to return to the submenu.
4. Confirm selection with a short press of the **MENU (3)** button.

- If *"Yes"* is selected, display will show *"Do you want to format memory card?"* with *"Yes"* and *"No"* dialogue options. Select *"Yes"* to format the memory card.
- If *"No"* is selected, formatting is aborted and you return to the submenu.

# Defective Pixel Repair

# Defective Pixel Repair

When using the device, defective (dead) pixels may appear on the microbolometer. These are bright or dark points of a constant brightness that are visible on the image.

Defective pixels on the microbolometer can increase in size relatively when digital zoom is activated.

**Axion Compact** thermal imagers allow the user to remove any defective pixels on the microbolometer using firmware as well as to cancel removing.

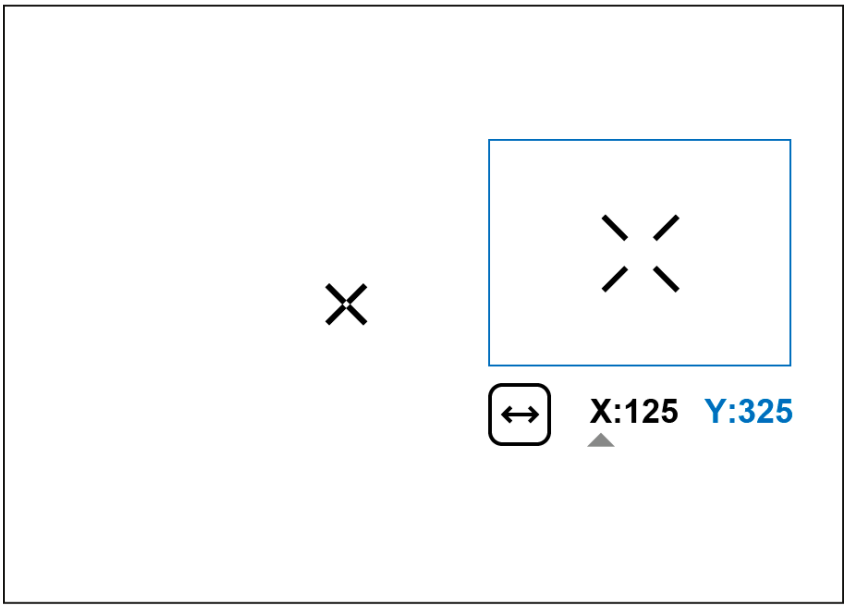


### Step 1. Enter the menu to fix the defective pixels

1. Press and hold the **MENU (3)** button to enter the main menu.
2. Use the **UP (4)/DOWN (2)** buttons to select the **Defective Pixel Repair** menu item.
3. Press briefly the **MENU (3)** to open the submenu.
4. Select the **Defective Pixel Repair** option by briefly pressing the **MENU (3)** button.

### Step 2. Select the defective pixel

1. A marker appears in the centre of the display.
2. On the right side of the display appears a “magnifying glass” – a magnified image in the frame with a fixed cross , designed for easier detection of a defective pixel and to match the pixel with the marker, and horizontal and vertical arrows for X and Y axes showing the marker’s movement .
3. With a short press of the **UP (4)/DOWN (2)** buttons move the marker to align it with a defective pixel.
4. Switch the direction of the marker from horizontal to vertical and vice versa with a short press of the **MENU (3)** button**.**
5. Align the defective pixel with the fixed cross in the frame – the pixel should disappear.

**Step 3. Remove the defective pixel**

1. Delete the defective pixel with a short press of the **ON/OFF (5)** button.
2. Once the pixel has been successfully deleted an *"OK"* message will briefly appear on the screen.
3. You can then delete another defective pixel by moving the marker across the display.
4. Exit the Defective Pixel Repair submenu with a long press of the **MENU (3)** button.

---

**Warning**! The display of a thermal imager may have 1- 2 pixels represented as bright white or coloured (blue, red) dots which cannot be deleted and are not a defect.

# Restore Default Pixel Map

This option allows the user to return all previously disabled defective pixels to their original state.

1. Press and hold the **MENU (3)** button to enter the main menu.
2. Use the **UP (4)/DOWN (2)** buttons to select the **Defective Pixel Repair** icon.
3. Press the **MENU (3)** button to enter the submenu.
4. Use the **UP (4)/DOWN (2)** buttons to select the **Restore Default Pixel Map** icon.
5. Activate the function by briefly pressing the **MENU (3)**
6. Using the **UP (4)/DOWN (2)** buttons, select *Yes* if you want to return to the factory pixel map and select *No* if you do not.
7. Confirm your selection with a short press of the **MENU (3)**

# Device Information

This menu item allows the user to view the following information about the device:

- SKU Number
- Firmware Version
- Device Name
- Hardware Version
- Device Serial Number
- Service Information

To display information, do the following:

1. Press and hold the **MENU (3)** button to enter the main menu.
2. Use the **UP (4)/DOWN (2)** buttons to select the **Device Information** ⓘ icon.
3. Press the **MENU (3)** button briefly to view / exit the information.

# Functions

# Video Recording And Photography

**Axion Compact** thermal imagers are capable of video recording and photography. Videos and images are saved on the built-in memory card.

Before using this feature, please set the **date** and **time** (see General Settings section).

For information on how to watch recorded photos and videos, see the Stream Vision 2 user manual: Android, iOS.

The built-in recorder operates in two modes **– Video** and **Photo.**

---

### Video mode. Video recording

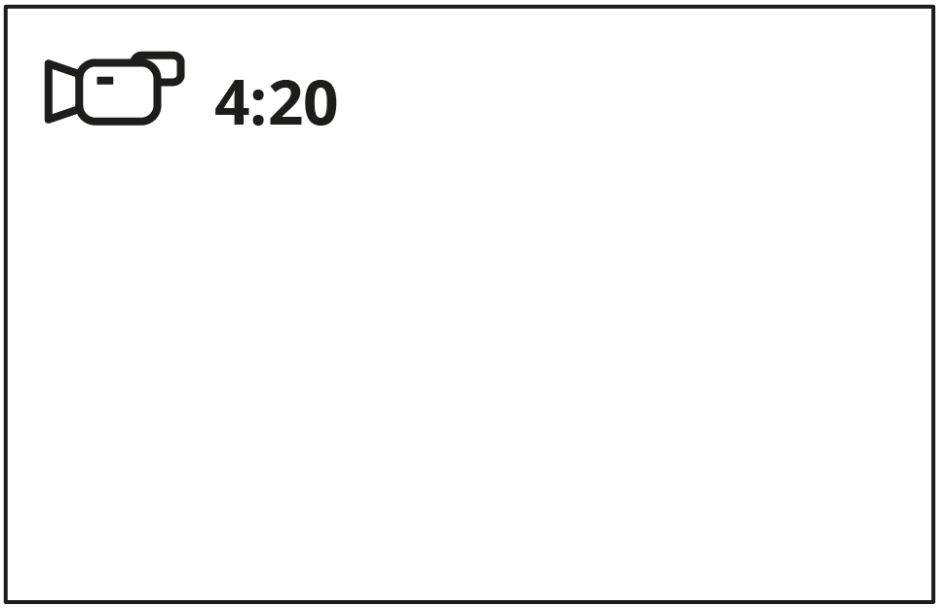


**1.** Switch to **Video** mode by pressing and holding the **DOWN/REC (2)** button.

**2.** The icon and the remaining recording time in HH:MM (Hours:Minutes) format are displayed in the upper left corner, for example 4:20.

**3.** Press the **DOWN/REC (2)** button briefly to start video recording.

**4.** When the video recording starts, the icon will disappear and the REC icon and timer in MM:SS (Minutes:Seconds) format will appear ●REC | 00:25.

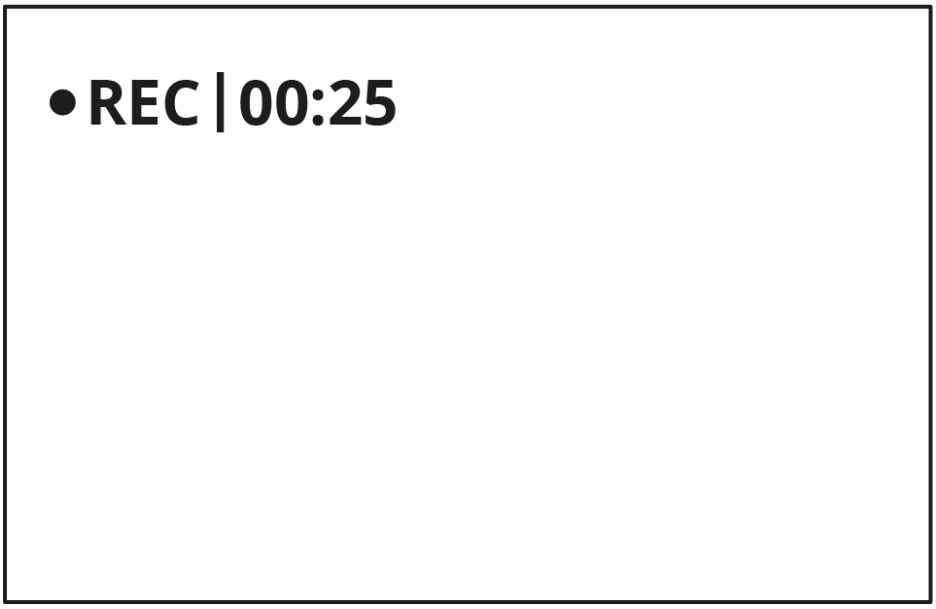


**5.** Pause and resume recording video with a short press of the **DOWN/REC (2)** button.

**6.** Stop recording video with a long press of the **DOWN/REC (2)** button.

**7.** Video files are saved to the built-in memory card after the video recording has been stopped.

**8.** Press and hold the **DOWN/REC (2)** button to switch between the **Video** and **Photo** modes (Video→ Photo→ Video...)

---

**Photo Mode. Capturing an image**

**1.** Switch to the **Photo** mode by pressing and holding the **DOWN/REC (2)** button.

**2.** Press the **DOWN/REC (2)** button briefly to take a photo. The icon flashes – the photo file is being saved to the built-in SD card.

---

*Notes:*

- You can enter and operate the menu during video recording.
- Recorded videos and photos are saved to the internal memory card in the format img_xxx.jpg (photos), video_xxx.mp4 (videos).
- Videos are recorded in clips with a maximum duration of 5 minutes. The number of recorded files is limited by the capacity of unit's internal memory.
- Regularly check the free capacity of the internal memory and move recorded footage to other storage media to free up space on the internal memory card.
- In case of a memory card error, you can use the format function in the General Settings section of the main menu.
- When the Display Off function is activated, video recording continues to run in the background.

# Discrete Digital Zoom

The device functionality allows you to quickly increase the base magnification (see **Optical Magnification** line in the table of Technical Specifications) by 2, 4 or 8 times as well as return to the base magnification.

*Note:* the magnification value is reset to the base value when the device is switched off.

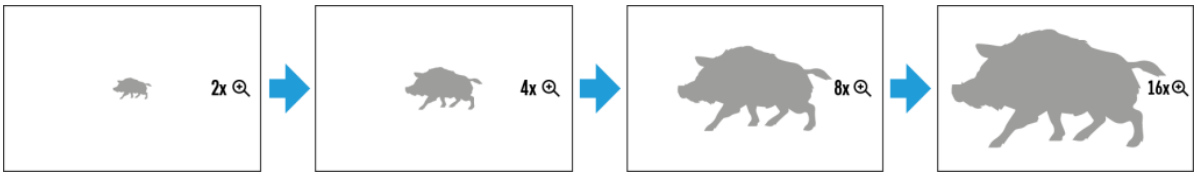


---

Press and hold the **UP/ZOOM (4)** button to change the digital zoom.

# PIP Function

The **PiP** (Picture-in-Picture) function allows you to see both the main image and a magnified image in a dedicated window.

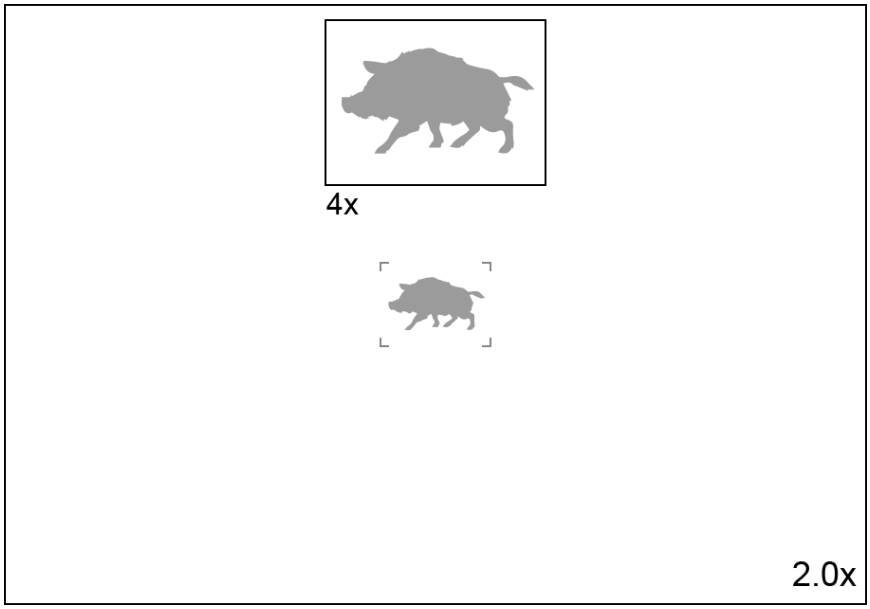


- To turn on and off the **PiP** function see the PiP Mode section.
- Press and hold the **UP (4)** button to change the magnification ratio in the **PiP** window.

- The zoomed image is displayed in a dedicated window, while the image in the rest of the screen is displayed at base magnification 2x.
- When the **PiP** is turned on you can control both the discrete and smooth digital zoom. In this case the zoom value changes only take place in the dedicated window.
- When the **PiP** function is turned off, the screen will display at the magnification that was set in **PiP** mode.

# Display-Off Function

This function darkens the screen, which aids the user's concealment. However, the device stays on.

When this function is in use, the device switches to the standby mode, which allows it to be switched on quickly if necessary.

1. When the device is on, press and hold the **ON/OFF (5)** button. The display will turn off, the current time and the **"Display off"** icon will appear.
2. Turn the display back on with a short press of the **ON/OFF (5)** button.
3. When you press and hold the **ON/OFF (5)** button, the display shows the **"Display off"** icon with a countdown. Pressing & holding the button down for the duration of the countdown will power the device off completely.

# Wi-Fi Function

The device has a function enabling wireless communication with external devices (smartphone or tablet) via Wi-Fi.

- Turn on the wireless module in the Wi-Fi Activation menu option.

Wi-Fi is displayed in the status bar as follows:

| Indication on the status bar | Connection Status |
|---|---|
| | Wi-Fi is switched off |
| | Wi-Fi connection is in progress |
| | Wi-Fi is switched on, no connection with device |
| | Wi-Fi is switched on, device connected |

- The device is recognized by an external device as AXION_XXXX where XXXX are the four last digits of the serial number.
- After entering the password on a mobile device (see **Password Setup** subsection of the **Wi-Fi Settings** section for more information on setting a password) and setting up a connection, the icon in the status bar will change to .
- The Wi-Fi function will turn off automatically if there is not enough battery power for Wi-Fi.

# Stadiametric Rangefinder

**Axion Compact** thermal imagers are equipped with a stadiametric rangefinder which allows the user to determine the approximate distance to an object of a known size with reasonable accuracy.

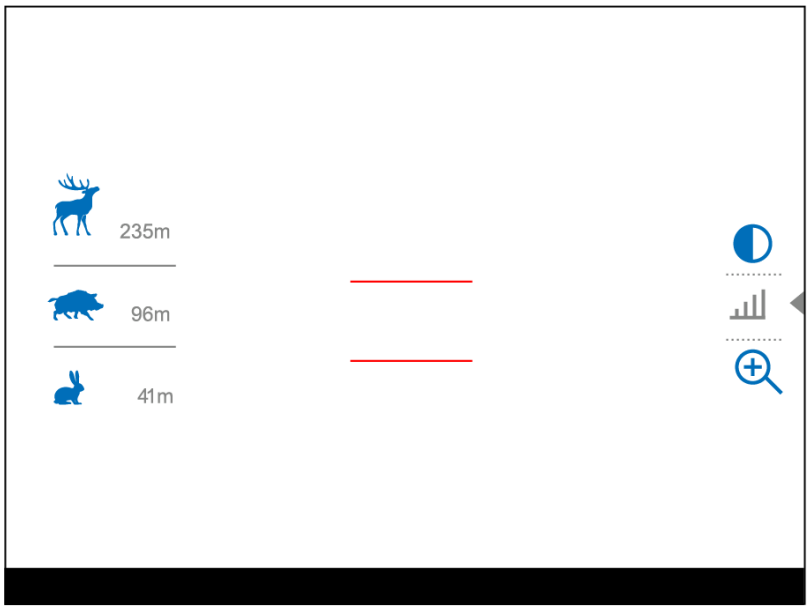

1. Select the **Stadiametric Rangefinder** function with short presses of the **MENU (3)** button until the icon is selected.
2. You will see on the display: measurement bars, icons of three reference objects and respective distances for the three objects.
3. Position the lower fixed bar under the object being ranged.
4. By pressing the **UP (4)/DOWN (2)** buttons, move the upper horizontal bar relative to the lower fixed bar until the object fits entirely between the two bars. The distance to the object is automatically recalculated as you move the upper line.
5. Exit the rangefinder mode with a long press of the **MENU (3)** button or wait 10 seconds to exit automatically.

---

*Notes:*

- There are three predefined values for the reference objects: Hare – 0.3 m height, Boar – 0.7 m height, Deer – 1.7 m height.
- Before it appears on the display, a measured distance value is rounded up to 5m for larger values and rounded down to 1m for smaller values.
- To select the unit of measurement (Meters or Yards), go to the **General Settings** menu item ⇒ **Units of Measure** submenu.

# USB Connection

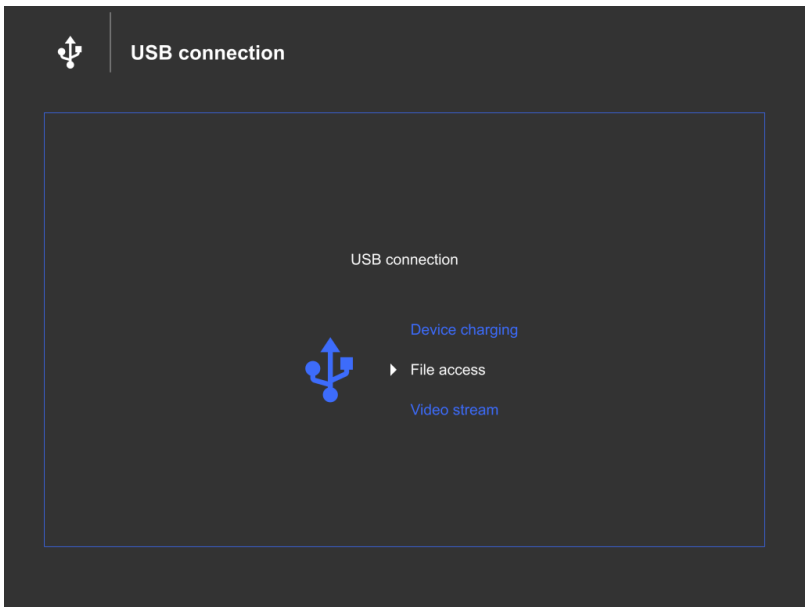

1. Connect one end of the USB cable to the USB Type-C **(9)** port of your device and the other end to the USB port of your PC / laptop using a USB Type-A adapter.
2. Turn the device on with a short press of the **ON/OFF (5)** button (a device that has been turned off cannot be detected by your computer).
3. Your device will be detected by the computer automatically; no drivers need to be installed.
4. Three connection modes will appear on the display: **Device charging**, **File access** (external memory) and **Video stream**.
5. Select the connection mode with the **UP (4)/DOWN (2)** buttons.
6. Confirm the selection with a short press of the **MENU (3)** button.

### Device charging

- In this mode, a PC/laptop is used as an external power supply. The status bar shows the icon 100. The device continues operating and all functions are available.
- The Battery Pack installed in the device is not being charged.
- When the USB is disconnected from the device when in the **Device charging** mode, the device keeps operating with the Battery Pack if it is available and sufficiently charged.

### File access

- In this mode the device is detected by the computer as a flash card. This mode is designed for work with the files saved in the device's memory. The device's functions are not available in this mode; the device turns off automatically.
- If video recording was in progress when the connection was made, recording stops and the video is saved.
- If the device is in **File access** mode and is disconnected from USB, the device will remain on.

### Video stream

The device can be connected to PC or smartphone via USB Type-C cable.

The device is recognized as a web camera and accessed via any app that can work with web cameras. Signal from USB has better quality and latency and can be recorded or edited with software on the connected device.

During the video stream it is possible to record the observed picture. Activation of video recording is only available from the device itself by briefly pressing the **REC (2)** button.

**NOTE!** Feature is supported only with iPhones that have USB Type-C port.

To view the video stream, use any application (on desktop or mobile platforms) that supports the UVC video standard.

Image transfer latency may occur in some applications. To reduce latency, disable the buffer in the application settings.

# Software

## Stream Vision 2

Install the Stream Vision 2 application to download files, update firmware, control the device by remote control and broadcast images from your device to a smartphone or a tablet via WiFi.

We recommend using the latest version – Stream Vision 2.

Mobile App
STREAM VISION 2

You can find further guidelines on Stream Vision 2 **here.**

**Download** from Google Play

**Download** from App Store

Find answers to frequently asked questions about using Stream Vision 2 **here**.

Android

iOS

# Firmware Update

1. Download the free Stream Vision 2 App in **Google Play** or **App Store**.
2. Connect your Pulsar device to your mobile device (smartphone or tablet).
3. Launch Stream Vision 2 and go to section “Settings”.
4. Select your Pulsar device and press “Check firmware update”.
5. Wait for the update to download and install. Pulsar device will reboot and will be ready to operate.

**Important**:

- if your Pulsar device is connected to a phone or mobile device, please turn on mobile data transfer (GPRS/3G/4G) to download update;
- if your Pulsar device is not connected to your phone or mobile device but is already listed in “Settings” > “My devices” section, you may use Wi-Fi to download update.

Find answers to frequently asked questions about using Stream Vision 2 **here.**

**Is your firmware up to date?**

Click **here** to check the latest firmware for your device.

# Maintenance

## Technical Inspection

It is recommended to inspect your device before each use. Check the following:

- The device should be free of any cracks or deformations.
- The lenses should be free of cracks, grease, dirt or debris.
- The battery level of the device should be full. Electrical sockets should be free of salts, oxidation, or other debris.
- All controls should be responsive.

## Technical Maintenance and Storage

Maintenance should be carried out at least twice a year and should include the following steps:

- Wipe the exterior surfaces of metal and plastic parts with a cotton cloth. Do not use chemically active substances, solvents, etc. as these will damage the paint.
- Clean the electric contacts of the Battery Pack and the device's battery slot using a non-greasy organic solvent.
- Check the objective and eyepiece lenses and if required, remove dust and sand from the optics (it is preferable to use a non-contact method). Cleaning of the exterior surfaces of the optics should be done with cleaners designed especially for this purpose.
- Store the device in a carrying case. Remove the Battery Pack for long-term storage.
- Avoid getting repellent on the housing of the device. This may damage the appearance of the housing coating.

# Troubleshooting

For technical assistance, please submit a request through our Support page.

# The device does not turn on

**Possible cause**

Battery Pack is discharged.

**Solution**

Charge the Battery Pack.

# Device malfunction

**Solution**

In case of any malfunctions during operation, try resetting the device by long pressing the ON/OFF button for 10 seconds.

# The device does not operate from an external power source

**Possible cause**

The USB cable is damaged.

**Solution**

Replace the USB cable.

**Possible cause**

The external power supply is discharged.

**Solution**

Charge the external power supply (if necessary).

# The image is blurry, with vertical stripes or an uneven background

**Possible cause**

Calibration is required.

**Solution**

Perform the calibration according to Calibration Mode section.

# Black screen after calibration

**Solution**

If the image does not clear after calibration, you need to recalibrate.

# When the device is turned on, the calibration frequency is at first higher, then decreases (if the automatic calibration mode is enabled)

**Possible cause**

After turning on the device, it takes some time for the sensor temperature to stabilize. This is normal and is not a defect.

# Poor quality image. There is noise or ghost images of previous scenes or objects

**Possible cause**

Manual calibration has been performed with the lens cover open.

**Solution**

Check the Calibration Mode, close the lens cover and calibrate the device.

# The image is too dark

**Possible cause**

Brightness or contrast level is too low.

**Solution**

Adjust the brightness or contrast level in the Quick Menu.

# Poor image quality / Detection range reduced

**Possible cause**

These problems may occur during observation in adverse weather conditions (snow, rain, fog, etc.).

# Smartphone or tablet PC cannot be connected to the device

**Possible cause**
Device password has been changed.

**Solution**

Delete the network and connect again using the password saved in the device.

**Possible cause**

The device is in an area with too many Wi-Fi networks that may be causing signal interference.

**Solution**

To ensure a stable Wi-Fi connection, relocate the device to an area with fewer or no Wi-Fi networks.

**Possible cause**

The device has a 5 GHz network enabled, but the smartphone only supports 2.4 GHz.

**Solution**

Switch the device's Wi-Fi bandwidth to 2.4 GHz.

More information on solving problems with connection to Stream Vision 2 by following the link.

# Wi-Fi signal is missing or interrupted

**Possible cause**

Smartphone or tablet is out of range of a strong Wi-Fi signal. There are obstacles between the device and the smartphone or tablet (e.g., concrete walls).

**Solution**

Relocate smartphone or tablet into the Wi-Fi signal line of sight.

More information on solving problems with connection to Stream Vision 2 by following the link.

# Color bars appear on the display or the image disappears

**Possible cause**

The device was exposed to static electricity during operation.

**Solution**

After exposure to static electricity, the device may either reboot automatically or require turning off and on again.

# The image quality during the device operation at below zero temperatures is worse than at positive temperatures

**Possible cause**

In warm climates, objects in the background of a thermal image heat up differently because of thermal conductivity, generating a high temperature contrast and a sharper thermal image.

In cold climates, objects in the background of a thermal image will cool down to roughly the same temperature, which leads to a greatly reduced temperature contrast and a degraded image quality. This is normal for all thermal imaging devices.

# The image of the object being observed is missing

**Possible cause**

The object is behind glass, which obstructs thermal vision.

**Solution**

Remove the glass.

# The supplied USB cable is broken

**Solution**

To replace the USB cable, contact your local distributor.

Self-repair of the cable is prohibited.

The ability to use a USB cable from other manufacturers with the device may be limited.

# Legal Compliances and Disclaimers

**Attention!** A license is required for Axion Thermal Imager when exporting outside your country.

**Electromagnetic compatibility.** This product complies with the requirements of European standard EN 55032: 2015, Class A.

**Caution!** Operation of this equipment in a residential environment could cause radio interference.

**Updates of the Product.** The manufacturer reserves the right at any time, without mandatory prior notice to the Customer, to make changes to the package contents (subject to the applicable laws, if any), design and characteristics that do not impair the quality of the Product.

**Repair**. Repair of the product is available within 5 years after purchase of the product.

**Limitation of Liability.** Subject to mandatory applicable laws and regulations: manufacturer will not be liable for any claims, actions, suits, proceedings, costs, expenses, damages or liabilities (if any), arising out of the use of this product. Operation and use of the product are the sole responsibility of the Customer. Manufacturer's sole undertaking is limited to providing the product(s) and related services in accordance with the terms and conditions of concluded transactions, including provisions established in warranty. The provision of products sold and services performed by Manufacturer to the Customer shall not be interpreted, construed, or regarded, either expressly or implied, as being for the benefit of or creating any obligation toward any third party (other than Distributor, Dealer, Buyer). Manufacturer's liability hereunder for damages, regardless of the form or action, shall not exceed the fees or other charges paid to Manufacturer for the product(s) and/or service(s).

MANUFACTURER WILL NOT BE LIABLE FOR LOST REVENUES OR INDIRECT, SPECIAL, INCIDENTAL, CONSEQUENTIAL, EXEMPLARY, OR PUNITIVE DAMAGES, EVEN IF THE MANUFACTURER KNEW OR SHOULD HAVE KNOWN THAT SUCH DAMAGES WERE POSSIBLE AND EVEN IF DIRECT DAMAGES DO NOT SATISFY A REMEDY.

CE UKCA