KRYPTON 2 Manual

Specifications
About the device
- Description
- Package Contents
- Components and Controls
- Features

Power Supply
- Precautions
- Recommendations for Battery Use
- Battery Charging
- Battery Installation
- External Power Supply

Getting Started
- Mounting the Adapter on the Optical Riflescope
- Mounting the Attachment on the Adapter
- Installing the Monocular on to the Attachment
- Powering on and Image Settings
- Button Operation

Interface
- Status Bar
- Quick Menu
- Main Menu
  - Enter the Main Menu
  - Amplification Level
  - Smoothing filter
  - User Mode
  - Colour Modes
  - Wi-Fi
  - Device Information
  - General Settings
  - Display Alignment
  - Bluetooth
  - Microphone
  - Icon Brightness

Functions
- Recoil recording
- Video Recording and Photography
- Wi-Fi Function

Display-Off Function
Wireless Remote Control
Descriptions of Controls
Remote Control Activation
USB Connection
Software
Stream Vision 2
Firmware Update
Maintenance
Technical Inspection
Technical Maintenance and Storage
Troubleshooting
The device does not turn on
Device malfunction
The device does not operate from an external power source
Blurred image with vertical stripes or an uneven background
Poor quality image. There is noise or ghost images of previous scenes or objects
Black screen after calibration
When the device is turned on, the calibration frequency is at first higher, then decreases (if the automatic calibration mode is enabled)
Image is too dark
Color bars appear on the display or the image disappears
The image of the object being observed is missing
The point of impact shifts after firing rounds
Poor image quality / Reduced detection distance
Smartphone or tablet cannot be connected to the device
Missing or interrupted broadcasting via Wi-Fi
When the device is used in low temperature conditions the image quality is worse than in positive temperatures.
Residual horizontal lines and traces of horizontally placed objects during observation process.
Remote control does not work
Status bar not visible
Legal Compliances and Disclaimers

Specifications

You can learn more about the main parameters here.

Model	**FXQ35**
SKU	76654
Microbolometer	
Type	Uncooled
Resolution, Pixels	384×288
Pixel Pitch, µm	17
Sensor NETD, mK	< 25
System NETD, mK	< 20
Frame Rate, Hz	50
Optical Characteristics	
Magnification of Attachment, x	1
Recommended Daylight Optics Magnification, x	2-6
Lens	F35/1.0
Field-of-view (Horizontal), deg/m per 100 m	10.7/18.7
Detection Range (animal height 1.7 m), m/y	1300/1422
Click value, mm@100 m	21
Minimum Focusing Distance, m/y	5/5.5
Display	
Type	AMOLED
Resolution, Pixels	1920×1080

Operational Characteristics	
Power Supply, V	3-4.2
Battery type/ Capacity/ Rated Output Voltage	Li-Ion Battery Pack IPS 7 / 6400 mAh / DC 3.7 V
External Power Supply	5 V (USB Type-C)
Max. Battery Pack Life (at t = 22 °C), Hour*	11
Degree of protection IP code (IEC60529)	IPX7
Maximum Recoil Power When Used with a Rifled Weapon, Joules	6000
Maximum Shock-Resistance When Used with a Slug Gun, Caliber	12
Compatible Pulsar adapters	PSP-42, PSP-50, PSP-56, PSP-30B, PSP-42B, PSP-50B, PSP-56B
Operating temperature, °C / °F	-25 – +50 / -13 – +122
Overall Dimensions, mm/inch	116×73×83 / 4.6×2.9×3.3
Weight (with Battery), kg/oz	0.44 / 15.5
Video Recorder	
Photo/Video Resolution, Pixels	912×688
Video/Photo Format	.mp4/.jpg
Built-in Memory	eMMC 16 GB
Wi-Fi Channel**	
Frequency	2.4/5 GHz
Standard	IEEE 802.11 b/g/n/ac (WPA)
Bluetooth	
Wireless Protocol	BLE 4.2

* Actual operating time will depend to what extent the Wi-Fi and built-in video recorder is used.

** The reception range may vary depending on various factors: obstacles, other Wi-Fi networks.

About the device

Description

Thermal Imaging Front Attachment **Krypton 2** is a multipurpose device that allows you to quickly and easily transform a daylight riflescope into a thermal imaging one.

The attachment is mounted on the lens of an riflescope with the help of adapters designed for various lens diameters. The attachment does not require any additional adjustment.

The attachment is intended for various applications, including hunting, sport shooting, night photography & video recording, and surveillance.

To get started, see the sections:

Battery Charging

Battery Installation

Mounting the Adapter on the Optical Riflescope

Mounting the Attachment on the Adapter

Installing the Monocular on to the Attachment

Powering on and Image Setting

Stream Vision 2

Package Contents

- Thermal Imaging Attachment

- Carrying Case
- Wireless Remote Control
- IPS7 Battery Pack
- Battery Pack Charger
- Power Adapter
- USB Type-C cable with USB Type-A adapter
- USB Type-C to MicroUSB Type-B adapter
- Quick Start Guide
- Lens-Cleaning Cloth
- Warranty Card

Components and Controls

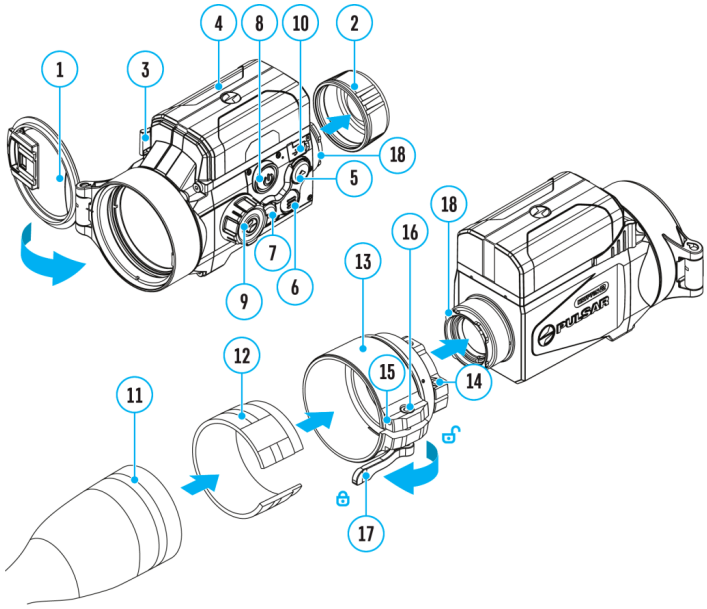

1. Lens cover
2. Eyepiece cover
3. Battery locking lever
4. Battery pack

5. UP/REC button
6. MENU button
7. DOWN/MODE button
8. ON/OFF/Calibration button
9. Lens focus knob
10. USB Type-C port
11. Objective lens end of daylight riflescope*
12. Insert**
13. Adapter**
14. Screw**
15. Tightening screw**
16. Screw**
17. Adapter lever**
18. Mount**

*Not included in the package contents

**Items of PSP B Ring Adapter (available separately)

Features

- Easily converts daylight optical riflescopes into thermal imaging riflescopes
- Preserves the benefits of daylight optics in night-time conditions
- Three calibration modes (manual, semi-automatic and automatic)
- 3 levels of sensitivity enhancement: Normal, High, Ultra
- Compatible with a wide range of daylight optical magnifications
- Wireless remote control
- High caliber recoil resistance 12 gauge, 9.3×64, .375 H&H
- Instant start
- Display off function
- Built-in video recording
- Remote Firmware update
- Fully watertight (IPX7 protection class)

- Wide operating temperature range (-25 °C – +50°C)

Video/audio recording

- Built-in video recorder
- Integration with iOS and Android devices
- Wi-Fi Smartphone remote control and surveillance
- Storing photos and videos in Cloud when using the Stream Vision 2 App
- Recoil activated video recording

Battery Pack

- Quick-change IPS7 Li-ion battery pack
- Charging via USB Type-C port

Power Supply

Precautions

- Always use the IPS charger supplied with the device (or purchased separately) to charge IPS batteries. Using an unsuitable charger can cause irreparable damage to the battery and fire.
- Do not charge the battery immediately after bringing it from cold to warm. Wait at least 30 minutes for the battery to warm up.
- Do not leave the battery unattended while charging.
- Do not use the charger if it has been modified or damaged.
- Do not leave the battery in a charger connected to the network after charging is complete.
- Do not expose the battery to high temperatures and naked flame.
- Do not use the battery as a power source for devices that do not support IPS7 batteries.
- Do not disassemble or deform the battery.
- Do not drop or strike the battery.
- Do not submerge the battery.
- Keep the battery out of the reach of children.

Attention! Please do not use the IPS 14 Battery Pack with the **Krypton 2 FXQ35/FXG50** due to the battery´s heavy weight.

Recommendations for Battery Use

- The battery should be partially charged for long-term storage – 50 to 80 %.

- The battery should be charged at an ambient temperature of 0 °C...+35 °C (+32 °F...+95° F). Otherwise, lifespan of the battery will decrease significantly.
- When using the battery at sub-zero temperatures, the battery capacity decreases, this is normal and not a defect.
- Do not use the battery at temperatures outside the range of -25 °C...+50 °C (-13 °F...+122 °F) – this may reduce battery's life.
- The battery has a short-circuit protection. However, any situation that may cause short-circuiting should be avoided.

Battery Charging

The device is supplied with a rechargeable IPS7 Lithium-ion Battery Pack which allows the attachment to be used for up to 11 hours. Charge the battery before first use.

The icon in the status bar will flash when the battery is low. The battery needs to be charged.

Option 1

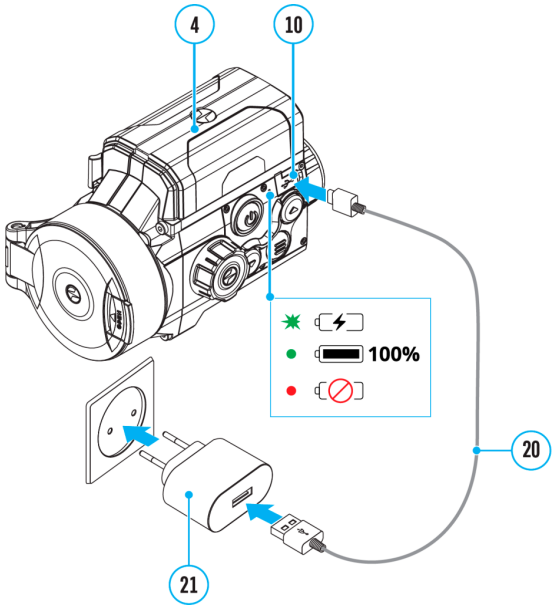

1. Install the IPS7 battery **(4)** in the battery compartment of the device.
2. Connect the USB Type-C cable **(20)** to the USB Type-C connector **(10)** of the device.

3. Connect the other end of the USB cable **(20)** to the Power Adapter **(21)** by removing the USB Type-A adapter.
4. Plug the Power Adapter **(21)** into a 100-240 V socket.

5. Wait until the battery is fully charged (indication in the status bar: ▬).

If the device is off, the LED indicator will display the battery charge status:

LED indication	Battery status
✸	Battery is charging
●	Battery is charged
●	Defective battery. **Do not use the battery!**
–	The device is switched on

Option 2

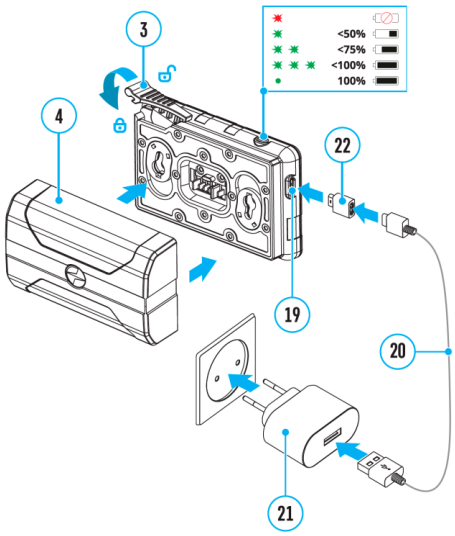

Charging

Step 1. Install the battery into the charger

1. Move the lever **(3)** to the open position 🔓.

2. Install the Battery Pack **(4)** into the charger.

3. Lock the battery **(4)** by moving the lever to the closed position 🔒.

Step 2. Check the current battery level

- Upon installation, a green LED indicator on the charger will start to glow and begin flashing:

  – once if the battery charge ranges from 0% to 50%.

  – twice if the battery charge ranges from 51% to 75%.

  – three times if the battery charge ranges from 76% to 99%.

- When the indicator is continuously green, the battery is fully charged. Disconnect the charger from the mains and disconnect the battery from the charger.
- If the battery charger indicator is constantly red when the battery is inserted, the charge level is probably below the permissible level (the battery has been in a discharged state for a long period of time). Leave the battery in the charger for a long period of time (up to several hours), then remove and reinsert.
- If the indicator begins to flash green, the battery is good.
- If it continues to show red, the battery is defective. **Do not use this battery!**

The LED indicator will display the battery charge status:

LED Indicator	Battery Charge Status
🔴	Battery is empty
🟢	Battery charge level is from 0% to 50%
🟢🟢	Battery charge level is from 51% to 75%
🟢🟢🟢	Battery charge level is from 76% to 99%
●	Battery is full

Step 3. Connect the charger to the mains supply

1. Connect the plug of the USB Type-C cable **(20)** with the attached MicroUSB adapter **(22)** to the USB socket **(19)** of the charger.
2. Connect the other end of the USB cable **(20)** to the power adapter **(21)**.

3. Plug the power adapter **(21)** into a 100-240V socket.
4. When the indicator is continuously green, the battery is fully charged. Disconnect the charger from the mains.

Battery Installation

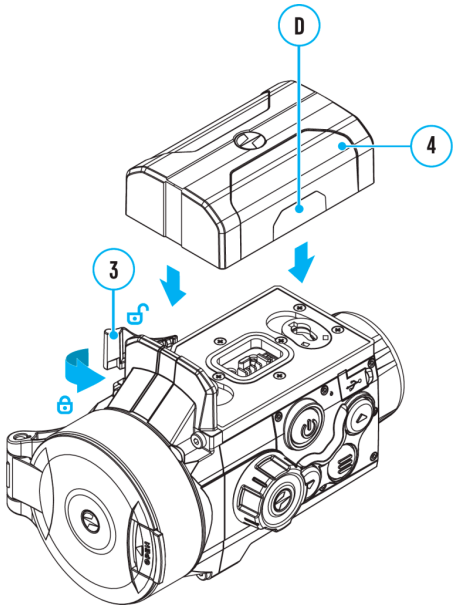

1. Move the lever **(3)** to the open position 🔓.

2. Insert the battery **(4)** into the slot provided for it on the body of the device in such a way that element **D** (protrusion on the battery case) is on the left.

3. Lock the battery **(4)** by moving the lever **(3)** to the closed position 🔒 .

External Power Supply

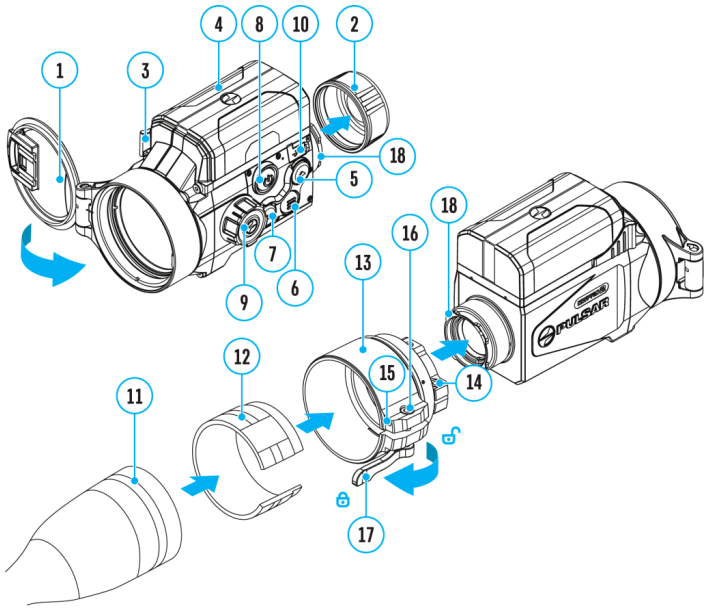

External power is supplied from an external source, such as a 5V Power Bank.

1. Attach the external power source to the USB Type-C connector **(10)** on the device.
2. The device will switch to operation from the external power supply, while the IPS7 battery will be gradually recharged.

3. A battery icon will appear on the display showing charge level as a percentage.

4. If the device is operated from an external power source and the IPS7 battery is not connected, an icon is displayed.

5. Once the external power source is disconnected, the device will begin functioning on battery power.

Attention! Charging Power Bank IPS7 batteries at air temperatures below 0 °C can result in reduced battery life. When using external power, connect Power Bank to the switched-on device, which have worked for several minutes.

Getting Started

Mounting the Adapter on the Optical Riflescope

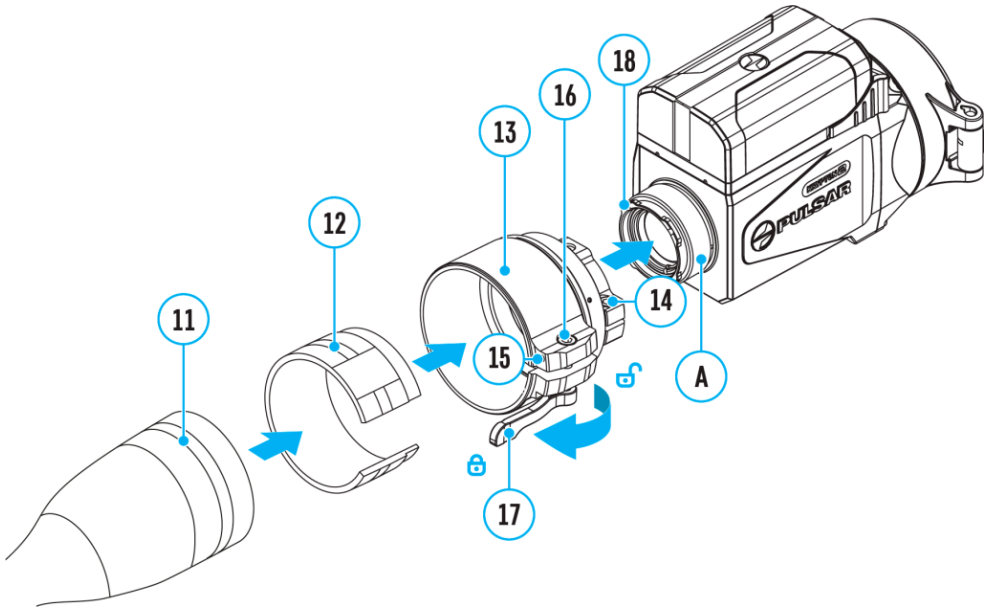

Note: if you wish to use a third-party adapter or a Pulsar PSP Ring Adapter, unscrew the ring **(A)** near the mount assembly **(18)**.

Step 1. Pick up an insert

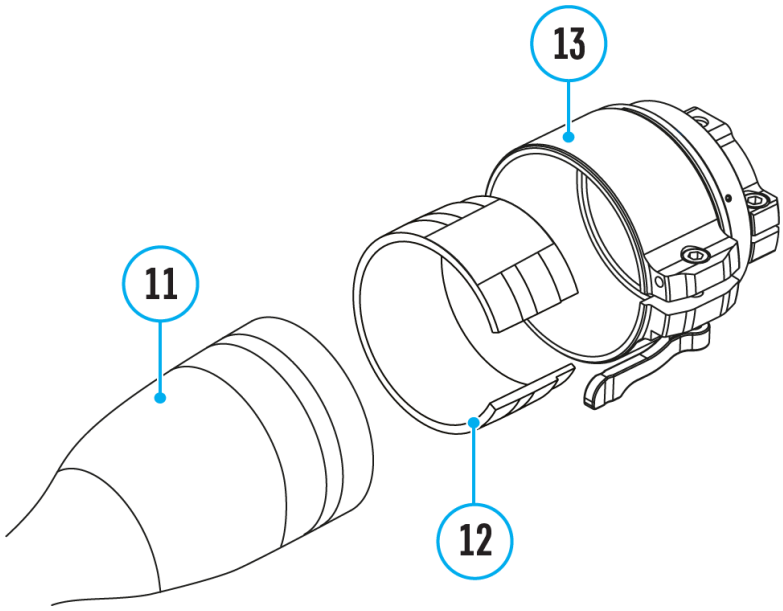

1. Select the Ring Adapter **(13)** (sold separately) with the insert **(12)** of the required diameter depending on the outer diameter of the lens of your optical riflescope **(11)** (see Table).
2. The designation 42 mm / 50 mm / 56 mm in the name of the adapter means the lens diameter of the optical riflescope.

For installation of the PSP-30B adapter, see its operating manual.

Step 2. Install the insert into the adapter

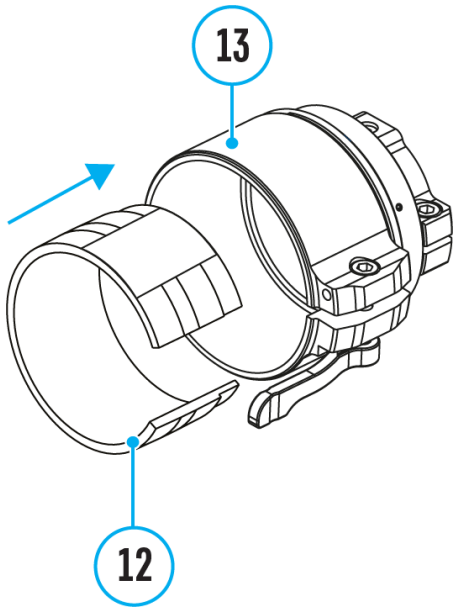

1. Apply 2-3 strips of double-sided tape to the outer surface of the insert of your choice **(12)**.
2. Push the insert **(12)** of your choice into the Ring Adapter **(13)** until it stops.

Step 3. Mount the adapter on the optical riflescope

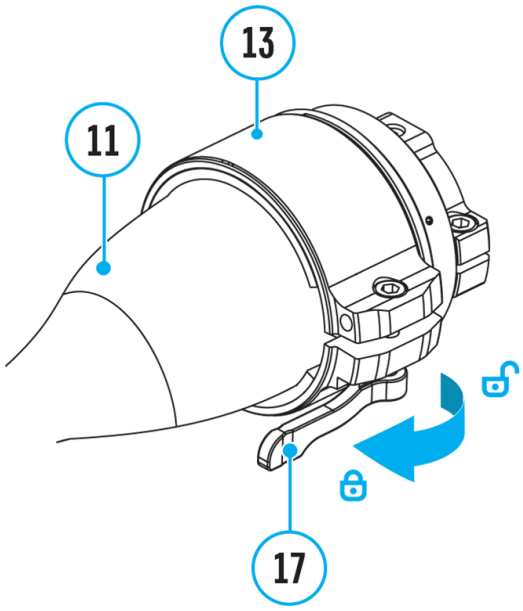

1. Move the lever **(17)** to the OPEN position.

2. Before installing the Ring Adapter **(13)** onto the optical riflescope, it is recommended to degrease the lens body of the optical riflescope **(11)**.
3. Mount the Ring Adapter **(13)** with the insert **(12)** onto the lens of the daylight optical riflescope **(11)** as far as it will go.

Step 4. Adjust adapter lever

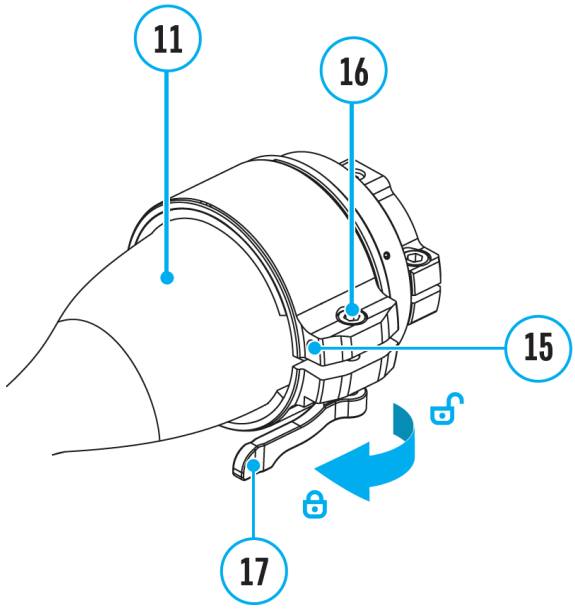

1. Move the lever **(17)** from its initial OPEN position to the CLOSE position.

2. Loosen the locking screw **(15)** with a 2mm Allen key*.
3. Tighten the screw **(16)** with a 4mm Allen key*. The clamping force should be 1.5-2 Nm (13.3-17.7 in-lbs) (use a torque screwdriver) to ensure the lever **(17)** is correctly tightened, while the Ring Adapter should not move relative to the body of the optical riflescope **(11)**. If necessary, tighten or loosen the screw **(16)** to operate the lever **(17)** in the best way possible.
4. Tighten the locking screw **(15)** as far as it will go.

*Items of PSP B Ring Adapter (available separately)

Recommendations for using the PSP B adapter

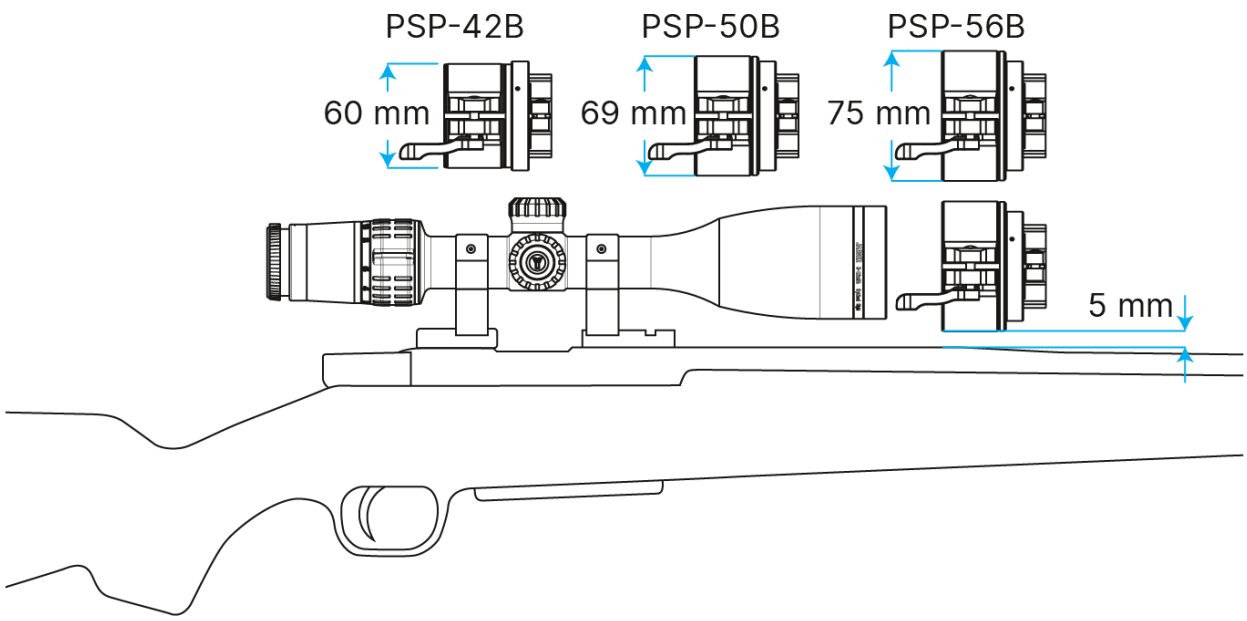

When installing the PSP B Ring Adapter on the riflescope, the gap between the adapter and the rifle body must be at least 5 mm.

If the gap is insufficient, use higher rings to mount the riflescope.

Selection table for riflescope inserts

Ring Adapter model	The internal diameter of the insert needs to match the outer diameter of the objective lens housing of the daylight riflescope it is being installed on	
	Insert internal diameter, mm	**Suitable for lens housing of daylight riflescope with an**

		outer diameter of, mm
PSP 42B Ring Adapter 42 mm (SKU 79206)	45.5	45.5
	46	46
	46.5	46.5
	47	46.7-47.6
	48	47.7-48.6
	49	48.7-49.6
	50	49.7-50.6
PSP 50B Ring Adapter 50 mm (SKU 79207)	51.6	51.6
	53.4	53.4
	55	54.7-55.6
	56	55.7-56.6
	57	56.7-57.6
	58	57.7-58.6
	59	58.7-59.6
PSP 56B Ring Adapter 56 mm	60	59.7-60.6

(SKU
79208)

61	60.7-61.6
62	61.7-62.6
63	62.7-63.6
64	63.7-64.6
65	64.7-65.6

Mounting the Attachment on the Adapter

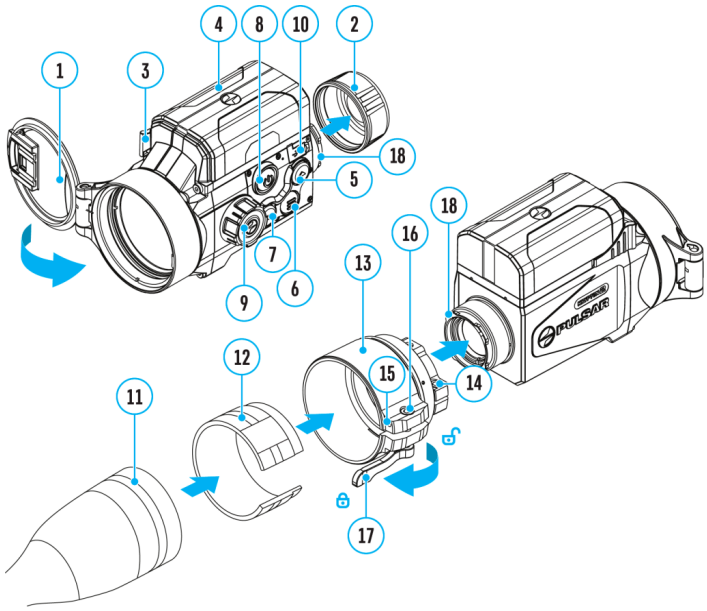

Step 1. Mount the attachment on the adapter

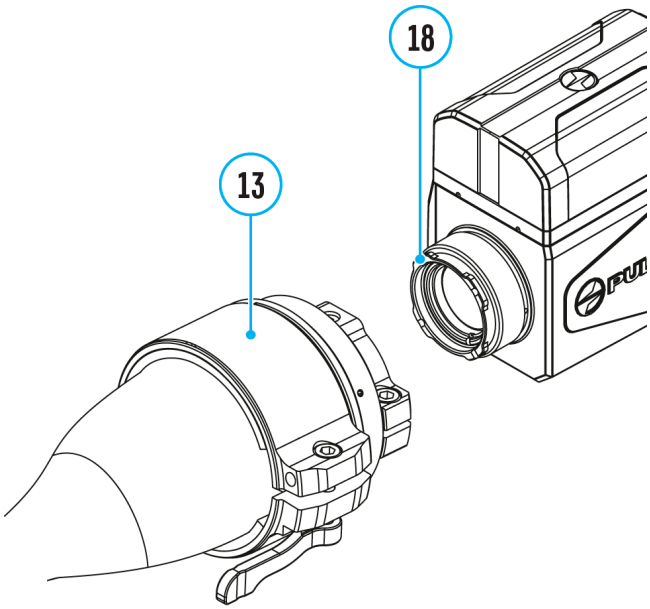

1. Remove the protective cover from the eyepiece of the attachment.
2. Align the protrusions on the adapter **(13)** with the grooves of the mount assembly **(18)** of the attachment and turn the attachment counterclockwise as far as it will go.

Step 2. Adjust the display position of the attachment

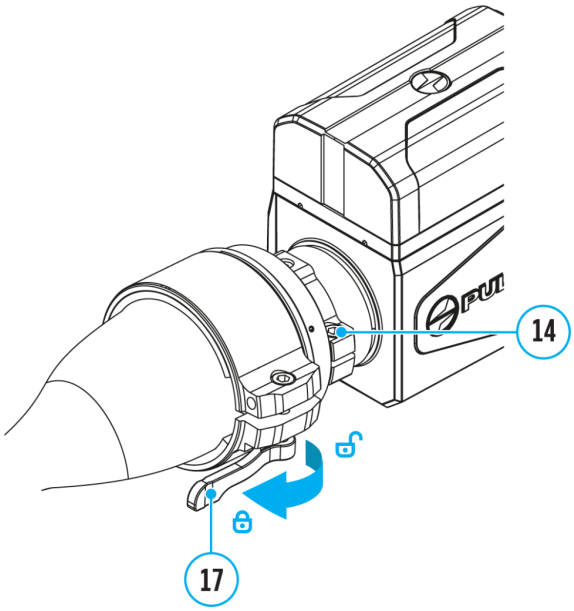

1. Loosen the screw **(14)** with an Allen key (S = 4mm).
2. Turn on the attachment by briefly pressing the **ON/OFF (8)** button.
3. Align the display center with the crosshairs of the reticle by tilting the attachment. You can activate the auxiliary cross on the display in the "Display Alignment" section of the main menu.
4. Tighten the screw **(14)** as far as it will go. The clamping force should be 5 N·m (44.3 in-lbs) (use the torque screwdriver to check).

5. Move the lever **(17)** to the OPEN position.

6. Align top and bottom display boundaries parallel to the horizontal axis of the optical sight by turning the attachment clockwise or counterclockwise.

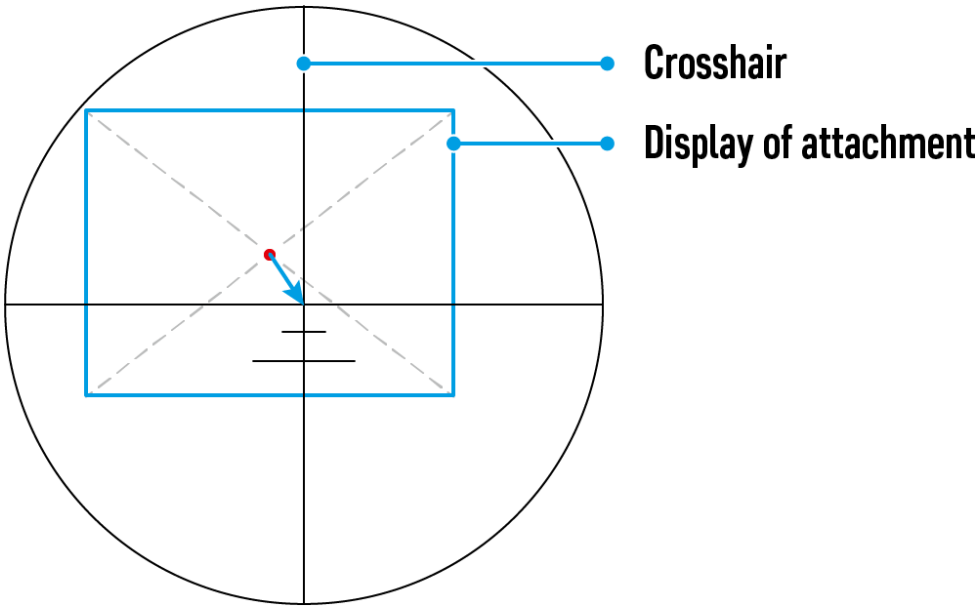

7. Move the lever **(17)** to the CLOSE position.

Installing the Monocular on to the Attachment

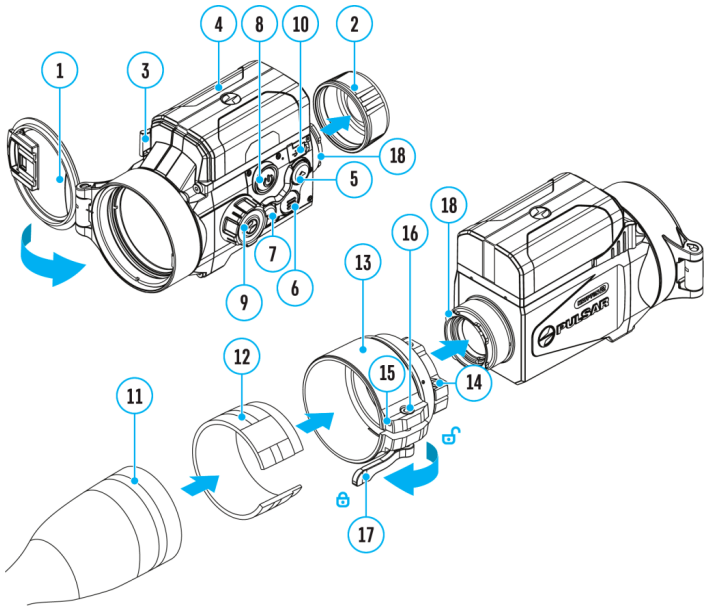

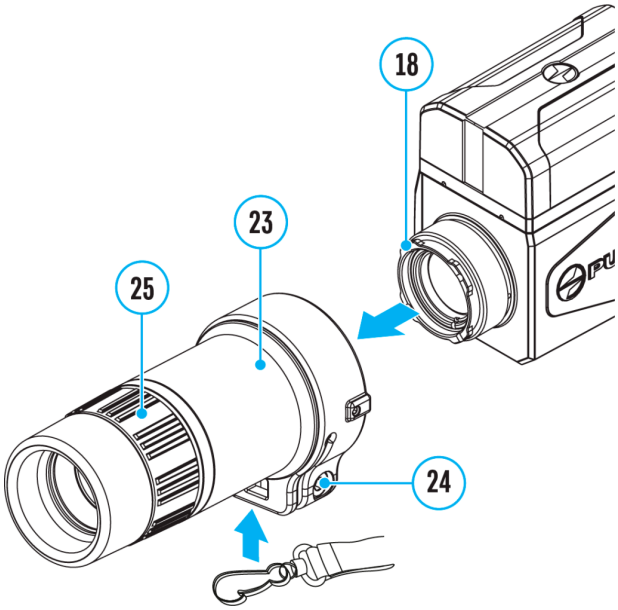

The **Pulsar 3×20 B monocular (23)** (available separately) allows you to transform the attachment into a hand-held thermal imager with 3x magnification.

1. Align the protrusions on the monocular **(23)** on the side of its lens with the grooves of the mount **(18)** of the attachment.

2. Turn the monocular clockwise to secure it on the attachment. The recommended position of the clamping screw **(24)** is at the bottom (see Figure).

3. Turn on the attachment by pressing the **ON/OFF (8)** button.

4. Adjust the eyepiece diopter ring **(25)** until the symbols in the display are sharp.

5. Loosen the screw **(24)** with an Allen key S3.

6. Align the display to the center of the image in the monocular by tilting the attachment in the required directions.

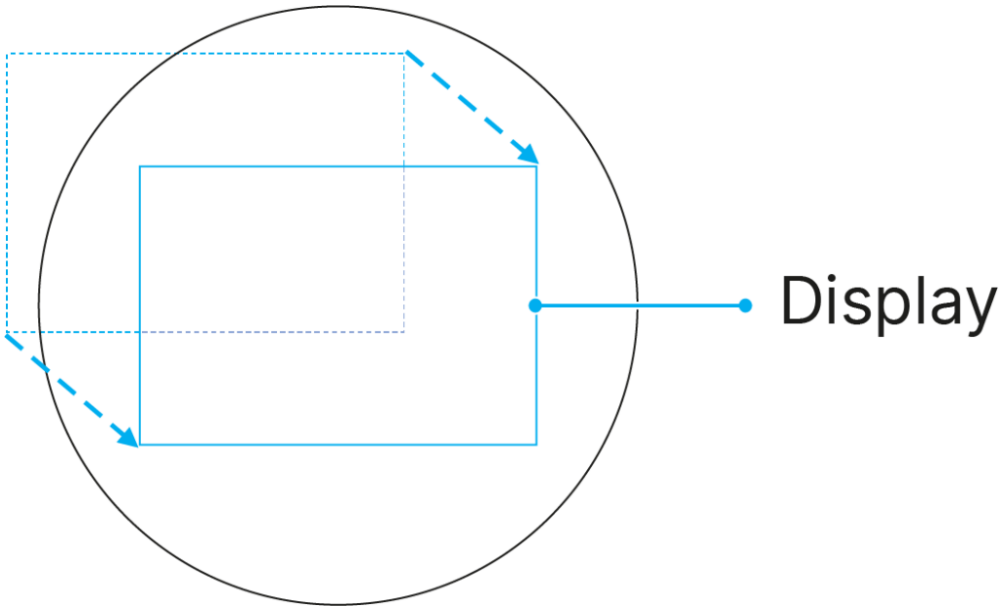

7. Lock the monocular in the chosen position by tightening the screw **(24)** until it stops (clamping force – 2.5 Nm/ 22.13 in-lbs).

8. To remove the monocular, turn it counterclockwise and disconnect from the attachment.

Powering on and Image Settings

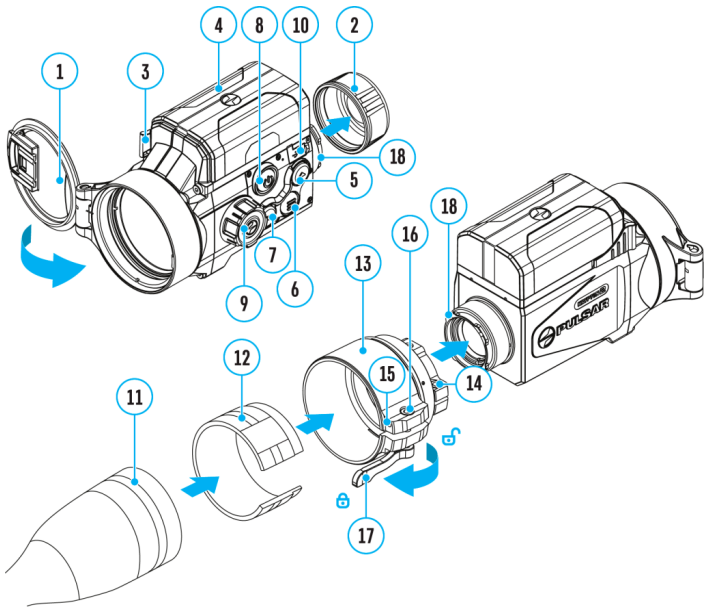

1. Open the lens cover **(1)**.

2. Turn on the attachment by pressing the **ON/OFF (8)** button.
3. If necessary, adjust the reticle sharpness according to the instructions for your riflescope.
4. Rotate the lens focus knob **(9)** to focus on the visual target.
5. Enter the main menu with a long press of the **MENU (6)** button and select the desired **calibration mode:** manual **(M)**, semi-automatic **(SA)** or automatic **(A)**.
6. Calibrate the image by briefly pressing the **ON/OFF (8)** button. Close the lens cover when calibrating manually.
7. Select the required **amplification level** (**"Normal"** N, **"High"** H, **"Ultra"** U)
   by briefly pressing the **MODE (7)** button.
8. Activate the **smoothing filter** in the main menu to improve the image as the amplification level increases.
9. Select one of the **colour palettes** in the main menu.
10. Activate the quick menu by briefly pressing the **MENU (6)** button to adjust the brightness and contrast of the display (for more details, see the **Quick Menu** section).
11. At high optical magnification, interface elements may be partially or completely invisible. To change the size of the interface, press and hold the **DOWN/MODE (7)** button.
12. Upon completion of use turn the device off by a long press of the **ON/OFF (8)** button.

Observation conditions: time of day, weather, type of observation objects affect the image quality. Custom settings for brightness, display contrast as well as the function of adjusting the microbolometer sensitivity level will help to achieve the desired quality in a particular situation.

Warning! Never point the lens at intensive energy sources such as laser radiation emitting devices or the sun. It can damage electronic components in the device. The warranty does not cover damage arising from failure to comply with operating instructions.

Button Operation

Operation	Button
Power device on	⏻ short press
Power device off	⏻ long press for 3 secs
Turn display off	⏻ long press for less than 3 secs
Turn display on	⏻ short press
Calibrate the microbolometer	⏻ short press
Switching amplification levels	▽ short press
Interface resizing	▽ long press
Video recorder	**Button**
Start/pause/resume video recording	△ short press
Stop video recording	△ long press
Switch to video / photo	△ long press
Capture Photo	△ short press
Main Menu	**Button**
Enter main menu	≡ long press
Navigation down/clockwise	▽ short press
Navigation up/counter-clockwise	△ short press
Confirm selection	≡ short press
Exit submenu without confirming selection	≡ long press

Exit menu (switch to viewing mode)	long press
Quick Menu	**Button**
Enter quick menu	short press
Switch between quick menu options	short press
Increase value	short press
Decrease value	short press
Exit quick menu	long press

Interface

Status Bar

The status bar is at the bottom of the display and displays information on the actual operating status of the device, including:

- Color Mode:

  – White hot

  – Black hot

- Bluetooth
- Calibration Profile (A, B or C)
- Smoothing Filter (displayed when the function is on)
- Amplification level (e.g., Normal)
- Calibration Mode (in Automatic calibration mode a countdown timer will appear instead of the calibration mode icon 3 seconds before automatic calibration begins).
- Power Indication:

  – charge level if the device is powered by a battery

  – charge level if the device is charging and powered by a battery

– no battery, the device is connected to an external power supply.

- Video recording status:

  – video recording is on

  – pause

- Microphone
- Wi-Fi Connection
- Time
- Auto shutdown function (for example, 5 min)

Quick Menu

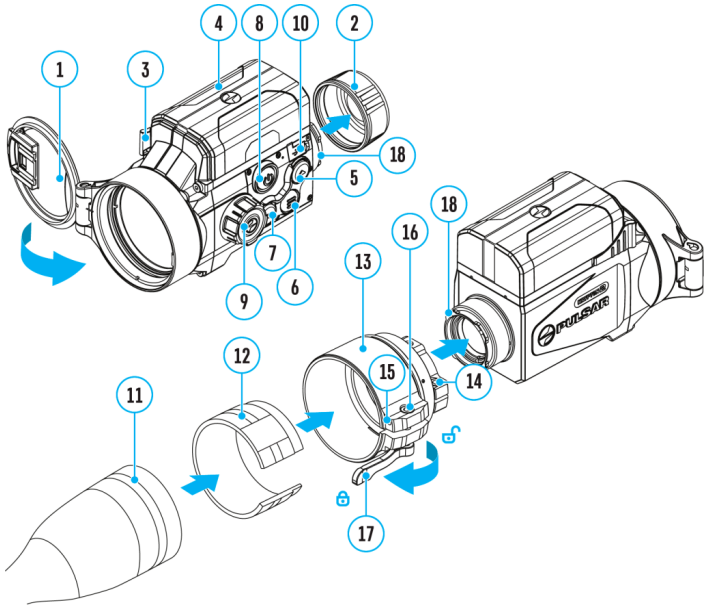

- Enter the menu with a short press of the **MENU (6).**

- To select the functions below, press successively **MENU (6).**

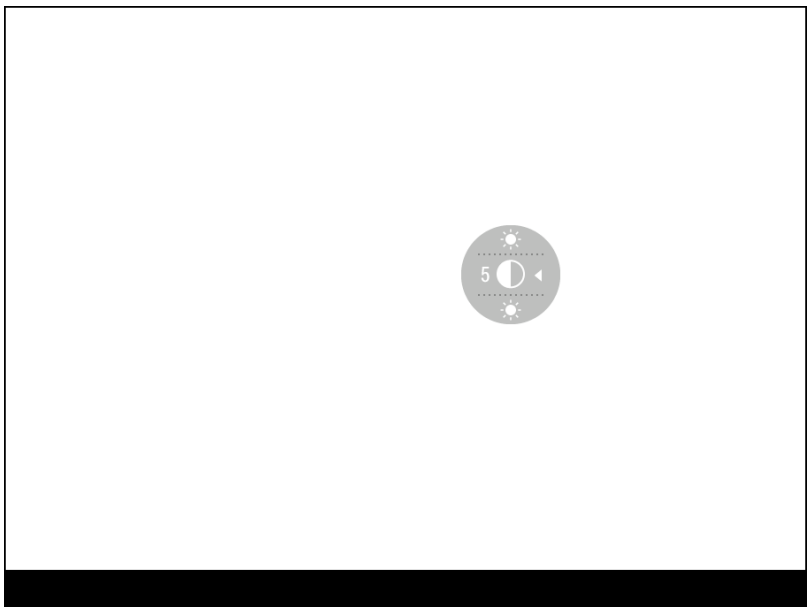

Contrast – press the **UP (5)/DOWN (7)** buttons to change the display contrast value from 0 to 20.

Brightness – press the **UP (5)/DOWN (7)** buttons to change the display brightness value from 0 to 20.

- To exit the menu, press and hold down the **MENU (6)** button, or wait 10 seconds for automatic exit.

Main Menu

Enter the Main Menu

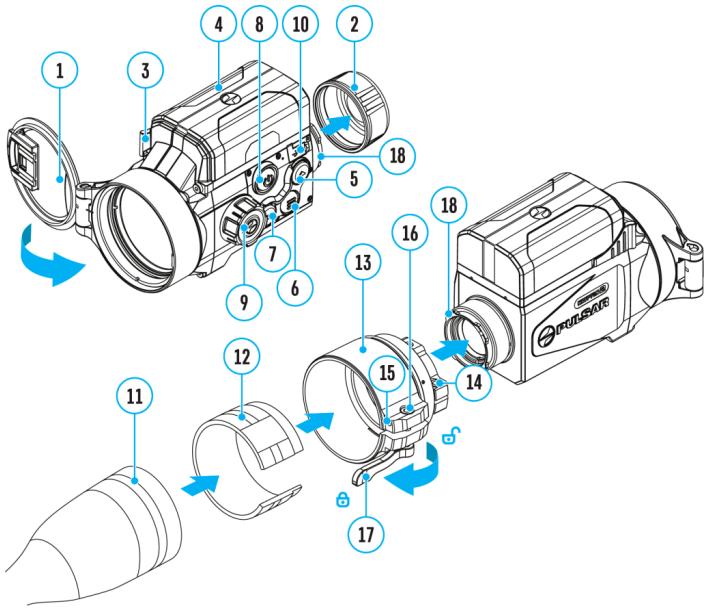

1. Enter the menu with a long press of the **MENU (6)** button.
2. Press the **UP (5)/DOWN (7)** buttons to move through the menu functions.
3. One short press of the **MENU (6)** button opens a menu item.
4. To exit the menu, press and hold down the **MENU (6)** button.
5. Automatic exit from the menu occurs after 10 seconds of inactivity.

Note: When entering the main menu, the background image darkens to enhance the menu visibility. This is normal and not a defect.

General view of the menu

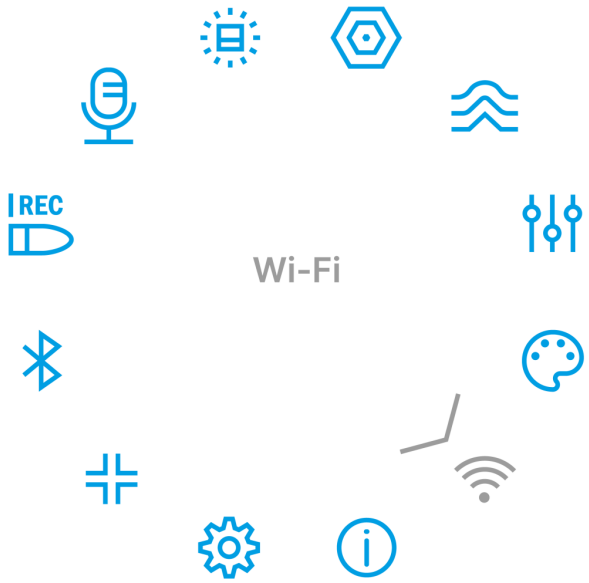

Amplification Level

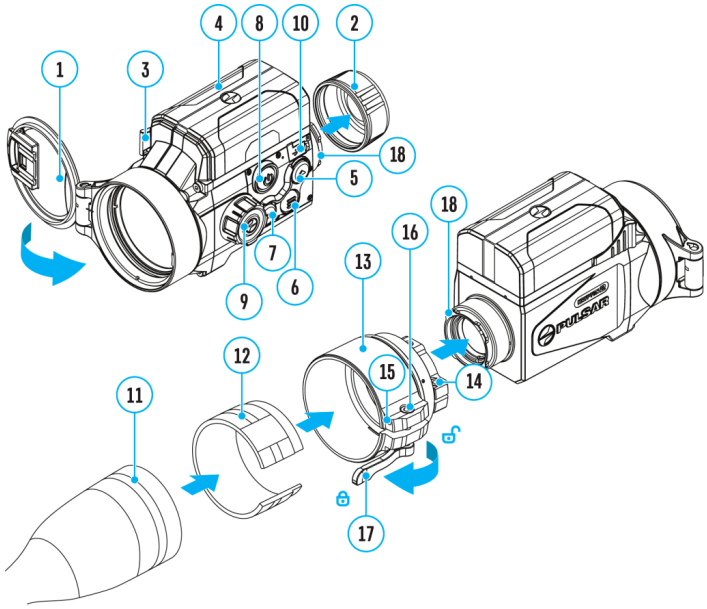

Sensitivity enhancement levels (Normal N, High H, Ultra U)are software algorithms that enhance the quality of detection and recognition in various observation conditions. When the temperature contrast decreases (fog, precipitation, high humidity), it is recommended to increase the amplification level.

Normal

High

Ultra

Option 1:

Press the **MODE (7)** button briefly to switch the amplification level.

Option 2:

1. Press and hold the **MENU (6)** button to enter the main menu.
2. Use the **UP (5)/DOWN (7)** buttons to select the **Amplification Level** icon.
3. Press the **MENU (6)** button briefly to enter the Amplification Level submenu.
4. Use the **UP (5)/DOWN (7)** buttons to select one of three amplifying levels of sensitivity (Normal N, High H, Ultra U).
5. Press the **MENU (6)** button briefly to confirm the selection.

Smoothing filter

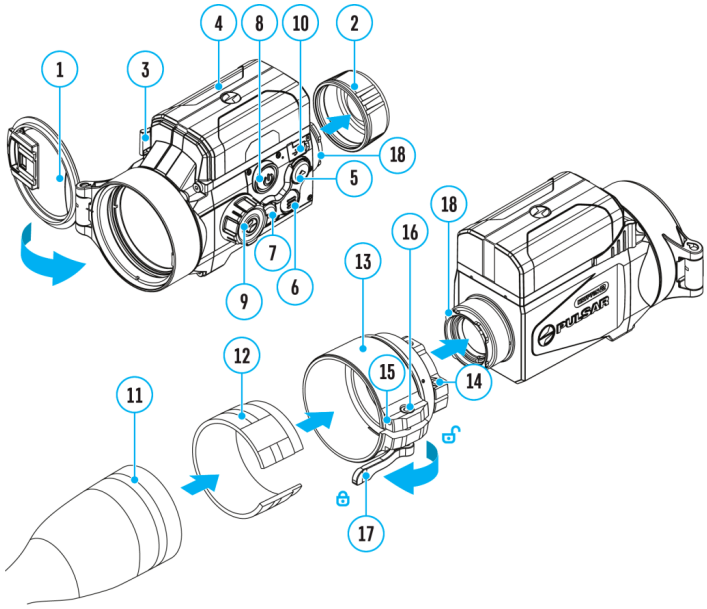

Used to reduce digital distortion while maintaining a high level of sensitivity.

Smoothing Filter Off

Smoothing Filter On

1. Press and hold the **MENU (6)** button to enter the main menu.
2. Use the **UP (5)/DOWN (7)** buttons to select the **Smoothing Filter** icon.
3. Press the **MENU (6)** button briefly to confirm the selection.
4. Press the **MENU (6)** button briefly to turn the filter on/off.

User Mode

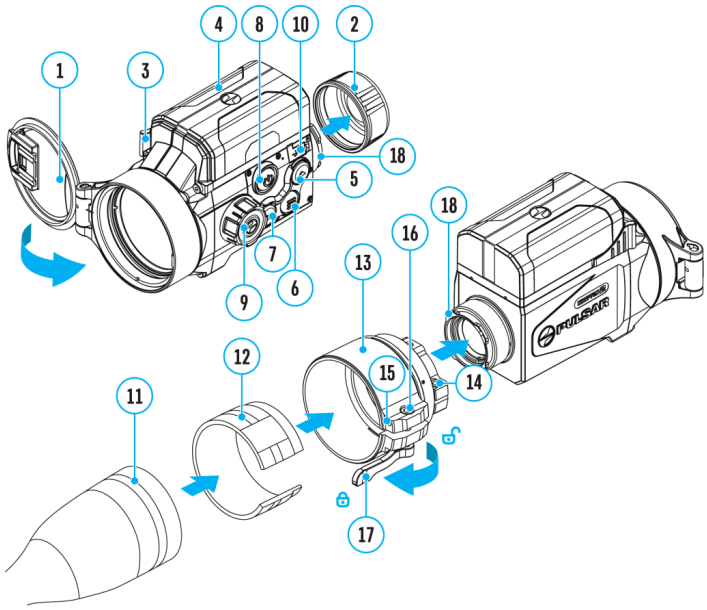

The User Mode function saves selected brightness and contrast settings in the device's memory providing optimal image quality for the next use of the thermal imager immediately, with no additional adjustments needed.

1. Press and hold the **MENU (6)** button to enter the main menu.

2. Use the **UP (5)/DOWN (7)** buttons to select the **User Mode** icon.
3. Press the **MENU (6)** button briefly to confirm the selection.
4. Press the **MENU (6)** button briefly to turn the mode on/off.

Colour Modes

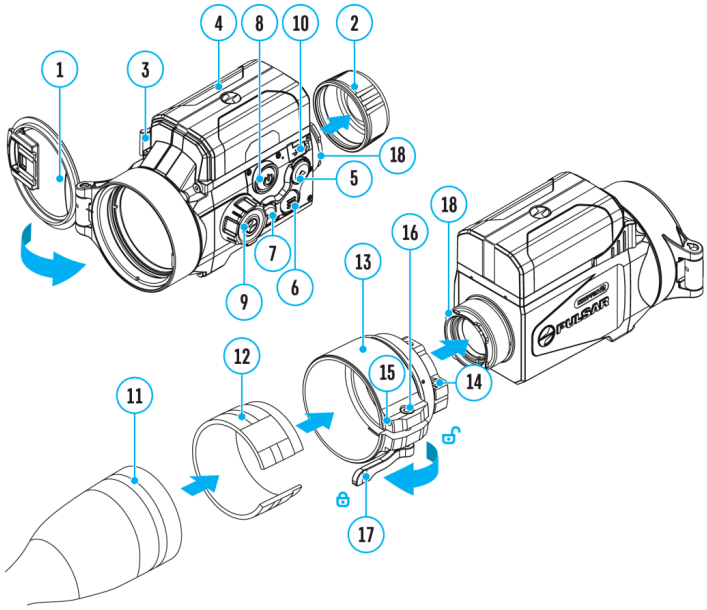

Colour palette selection.

White Hot is the default display mode.

To select an alternative palette, do the following:

1. Press and hold the **MENU (6)** button to enter the main menu.
2. Use the **UP (5)/DOWN (7)** buttons to select **Colour Modes** icon.
3. Press the **MENU (6)** button briefly to enter the submenu.
4. Use the **UP (5)/DOWN (7)** buttons to select the desired palette.
5. Press the **MENU (6)** button briefly to confirm the selection.

Tip: to preserve brightness and contrast values when switching palettes, activate User Mode.

- **White hot** – a black and white palette where black = cold; white = hot
- **Black hot** – a black and white palette where white = cold; black = hot
- **Green**
- **Red Hot**
- **Red Monochrome**
- **Rainbow**
- **Ultramarine**
- **Violet**
- **Sepia**

Attention! The device should not be used to accurately measure temperature. The images generated are based on temperature contrast rather than true temperature readings.

Wi-Fi

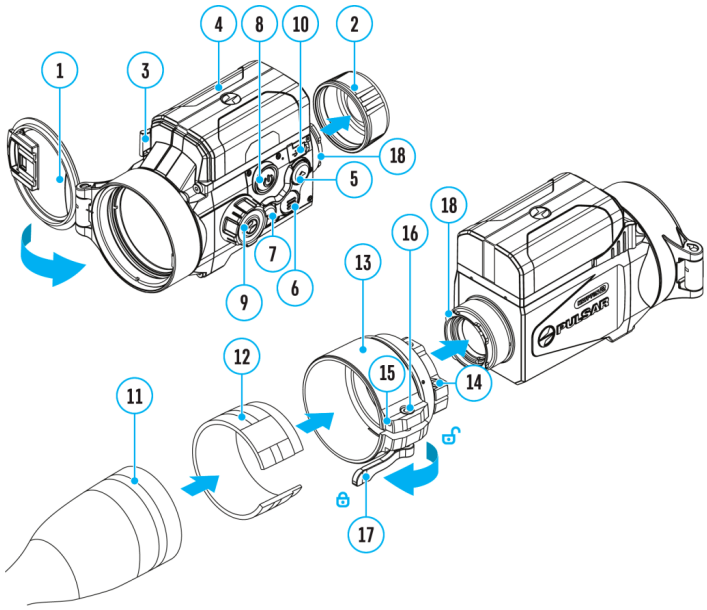

This menu option allows you to set up your device for operation in a Wi-Fi network.

1. Press and hold the **MENU (6)** button to enter the menu.
2. Select the **Wi-Fi** option with the **UP (5)/DOWN (7)** buttons.
3. A short press of the **MENU (6)** button opens the menu section.

Wi-Fi Activation

Turn Wi-Fi on/off.

1. Select the **Wi-Fi Activation** option with the **UP (5)/DOWN (7)** buttons.
2. A short press of the **MENU (6)** button opens the submenu.
3. To turn the Wi-Fi on or off press the **UP (5)/DOWN (7)** buttons.
4. Confirm your selection with a short press of the **MENU (6)** button.

Password Setup

This submenu allows you to set a password to access your thermal imaging attachment from a mobile device. The password is used to connect an external device (i.e. smartphone) to your device.

1. Select the **Password Setup** PAS option with the **UP (5)/DOWN (7)** buttons**.**
2. A short press of the **MENU (6)** button opens the submenu.
3. The unique password only for your device will appear on the image.
4. Set your desired password with the **UP (5)/DOWN (7)** buttons. Press the **MENU (6)** button to toggle the digits.

5. Press and hold down the **MENU (6)** button to save the password and exit the submenu.

Access Level Setup

This submenu allows you to set access levels of Stream Vision 2 application to your device.

- Access level **Owner**. **Stream Vision** user has complete access to all device's functions.
- Access level **Guest**. **Stream Vision** user has access only to real time video stream from the device.

1. Select the **Access Level Setup** submenu with the **UP (5)/DOWN (7)** buttons.
2. A short press of the **MENU (6)** button opens the submenu
3. Select **Owner** or **Guest** with the **UP (5)/DOWN (7)** buttons.
4. Confirm your selection with a short press of the **MENU (6)** button.

Wi-Fi Band

This setting helps to solve smartphone connection issues in the following cases:

- If your smartphone does not support 5 GHz Wi-Fi band, switch to 2.4 GHz.
- Many Wi-Fi networks cause interference. In this case, switching between Wi-Fi bands can improve the connection between the device and the smartphone.

1. Select the **Wi-Fi Band** option with the **UP (5)/DOWN (7)** buttons**.**
2. Press the **MENU (6)** button briefly to enter the submenu.
3. Press the **UP (5)/DOWN (7)** buttons to select the Wi-Fi bandwidth – **5 GHz** or **2.4 GHz**.
4. Confirm your selection with a short press of the controller **MENU (6)** button.

Device Information

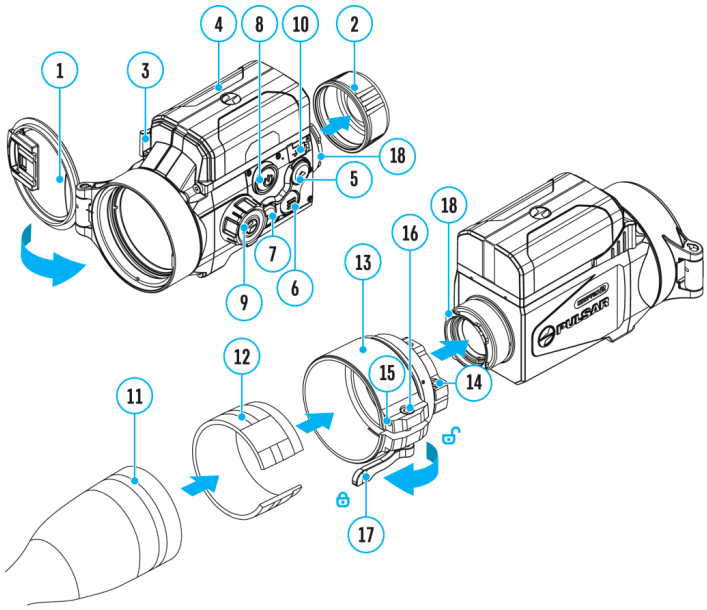

This menu item allows the user to view the following information about the device:

- SKU Number
- Firmware Version
- Device Name
- Hardware Version
- Device Serial Number
- Service Information

To display information, do the following:

1. Press and hold the **MENU (6)** button to enter the main menu.
2. Use the **UP (5)/DOWN (7)** buttons to select the **Device Information** ⓘ icon.
3. Press the **MENU (6)** button briefly to view/exit the information.

General Settings

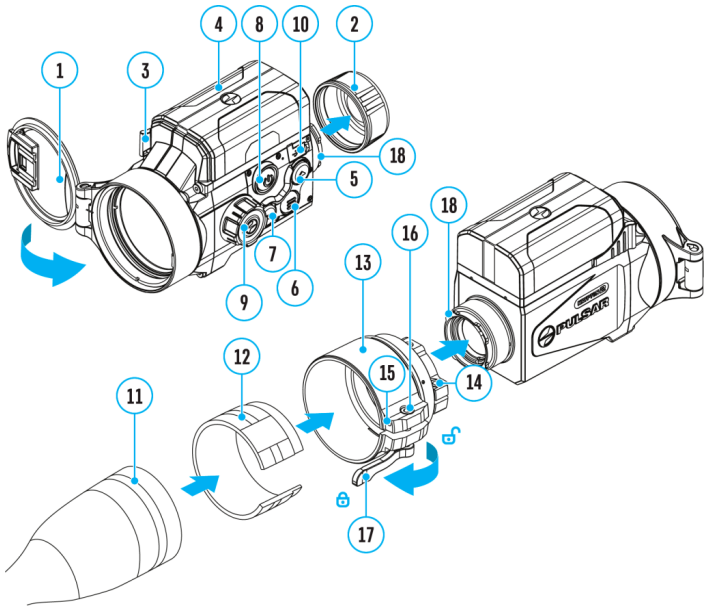

This menu section allows you to change the interface language, set the date, time, return the device to factory default settings and perform memory card formatting.

1. Press and hold the **MENU (6)** button to enter the main menu.
2. Select the submenu **General Settings** with the **UP (5)/DOWN (7)** buttons.
3. A short press of the **MENU (6)** button opens the submenu.
4. Select the desired menu item with the **UP (5)/DOWN (7)** buttons.

Language

1. A short press of the **MENU (6)** button opens the **Language** submenu.
2. Select one of the available interface languages (English, German, Spanish, French, Russian, Italian, Portuguese, Dutch, Danish, Norwegian, Swedish, Polish, Czech, Hungarian, Bulgarian, Finnish, Lithuanian, Latvian, Ukrainian) with the **UP (5)/DOWN (7)** buttons.
3. Confirm your selection with a short press of the **MENU (6)** button.

Date

1. A short press of the **MENU (6)** button opens the submenu **Date** .
2. The date appears in dd/mm/yyyy format (01/01/2023).
3. Set the required year, month and day with the **UP (5)/DOWN (7)** buttons (the **UP (5)** button increases the value and the **DOWN (7)** button reduces it). Press the **MENU (6)** button to toggle the digits.
4. To save your chosen date and exit the submenu, press and hold the **MENU (6)** button.

Time

1. A short press of the **MENU (6)** button opens the submenu **Time** .
2. Select the time format (24-hour clock or AM/PM) by pressing the **UP (5)/DOWN (7)** buttons.
3. Press the **MENU (6)** button to move to the hour setting.
4. Set the hour with the **UP (5)/DOWN (7)** buttons. The **UP (5)** button increases the value and the **DOWN (7)** button reduces it.
5. Press the **MENU (6)** button to move to the minute setting.
6. Set the minute by pressing the **UP (5)/DOWN (7)** buttons.
7. To save your chosen time and exit the submenu, press and hold the **MENU (6)** button.

Auto Shutdown

This item allows you to activate the auto shutdown function for when the device is in a non-operating position (tilted up or down at an angle of more than 70°, right or left at an angle of more than 30°).

1. A short press of the **MENU (6)** button opens the **Auto Shutdown** submenu.
2. Use the **UP (5)/DOWN (7)** buttons to select the time period (**1 min, 3 min, 5 min**) upon expiry of which the device will automatically shut down, or select **Off** if you wish to deactivate Auto Shutdown.
3. Press the **MENU (6)** button briefly to confirm the selection.

Note: If the Auto shutdown function is activated, the status bar shows an icon and shutdown time period as 1 min.

Calibration mode

Calibration enables the device to equalize the microbolometer background temperature and eliminate the image flaws (such as vertical bars, phantom images, etc.).

There are three calibration modes: **Manual, Semi-Automatic** and **Automatic**.

The selected calibration mode is displayed in the status bar (see Status Bar section).

Select the required mode in the Calibration Mode menu item:

1. A short press of the **MENU (6)** button opens the submenu **Calibration mode** icon.
2. Press the **MENU (6)** button briefly to enter the submenu.

3. Use the **UP (5)/DOWN (7)** buttons to select one of the calibration modes described below.
4. Press the **MENU (6)** button briefly to confirm the selection.

M mode (Manual)

- Close the lens cover **(1)**.
- Press the **ON/OFF (8)** button briefly.
- Open the lens cover **(1)** after the calibration is completed.

SA mode (Semi-Automatic)

- The user independently determines the need for calibration (according to the image being observed).
- Press the **ON/OFF (8)** button briefly to activate calibration.
- There is no need to close the lens cover because an internal shutter covers the microbolometer automatically.

A mode (Automatic)

- The device is calibrated autonomously according to firmware algorithms.
- There is no need to close the lens cover because an internal shutter covers the microbolometer automatically.
- In this mode, the user can still choose to calibrate the device using the **ON/OFF (8)** button if required (as in the **SA** mode).
- In Automatic calibration mode a countdown timer will appear instead of the calibration mode icon 3 seconds before automatic calibration begins.

Notes:

- During calibration, the image on the display briefly freezes for up to 1 second.
- The selected calibration mode is saved after restarting the device.

Video Compression

When set to ON, standard video compression is applied so the video file size is reduced.

When set to OFF, minimal video compression is applied. In this case, the quality of the recorded video is better, but its size is significantly increased.

Warning! Larger video file sizes result in shorter recording times. This may lead to longer download times for video files through the Stream Vision 2 app.

Enable/disable video compression:

1. Select the **Video Compression** menu item with the **UP (5)/DOWN (7)** buttons.

2. To turn on video compression, briefly press the **MENU (6)** button. On

3. To turn off video compression, briefly press the **MENU (6)** button. Off

Display Position Calibration

The attachment is configured so that after fitting onto an optical riflescope that had been properly zeroed, no adjustment of the aiming point is required. Yet if point of impact change is observed after putting on the attachment, you can fix it with display position calibration procedure.

Calibration Profile

1. Press and hold the **MENU (6)** button to enter the main menu.
2. Select the submenu **General Settings** with the **UP (5)/DOWN (7)** buttons.
3. A short press of the **MENU (6)** button opens the submenu.

4. Press **UP (5)/DOWN (7)** buttons to select **Display Position Calibration** menu

   item.
5. A short press of the **MENU (6)** button opens the submenu.

6. Press briefly the **MENU (6)** button to open the submenu **Calibration Profile**.

7. Select one of the calibration profiles (shown with letters A; B; C) with **UP (5)/DOWN (7)** buttons. Different profiles can be used when using the device on different rifles or when shooting with different bullets.
8. Confirm your selection with a short press of **MENU (6)** button.
9. The name of the selected profile appears in the status bar.

Position Calibration

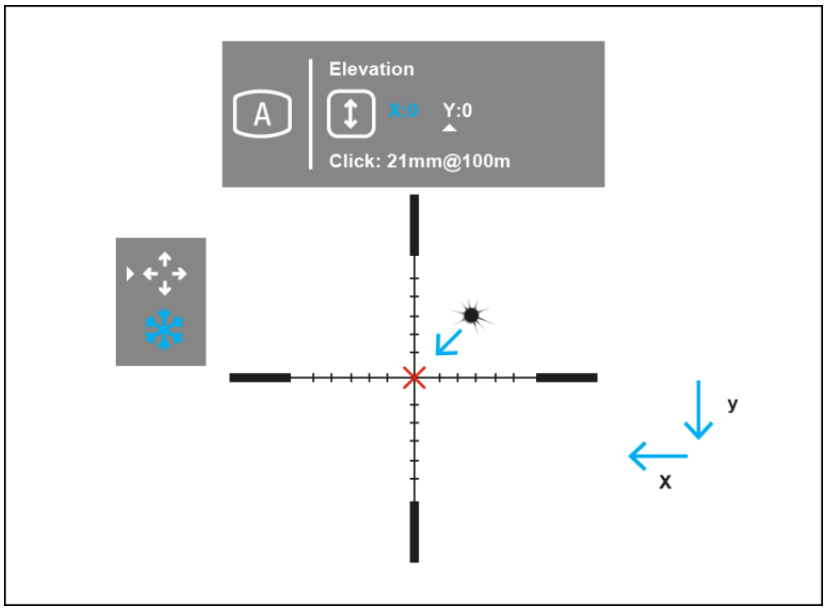

1. To freeze the image, select **Freeze** and briefly press the **MENU (6)** button.

2. Press **UP (5)/DOWN (7)** buttons to select **Position Calibration** menu item.

3. Confirm your selection with a short press of **MENU (6)** button. Display coordinates X=0; Y=0 and click value will appear.
4. Use the **UP (5)/DOWN (7)** buttons to move the image horizontally (X axis) and vertically (Y axis) so that the point of impact moves to the center of the riflescope reticle.
5. Press the **MENU (6)** button to toggle between the X and Y coordinates.
6. The image offset range is +/- 20 pixels horizontally (X axis), +/- 20 pixels vertically (Y axis).
7. To exit the menu and save the settings, press and hold the **MENU (6)** button for two seconds

Defective Pixel Repair

When using the device, defective (dead) pixels may appear on the microbolometer. These are bright or dark points of a constant brightness that are visible on the image.

Krypton 2 thermal imaging attachments offer the possibility to repair any defective pixels on the microbolometer using firmware as well as to cancel removing.

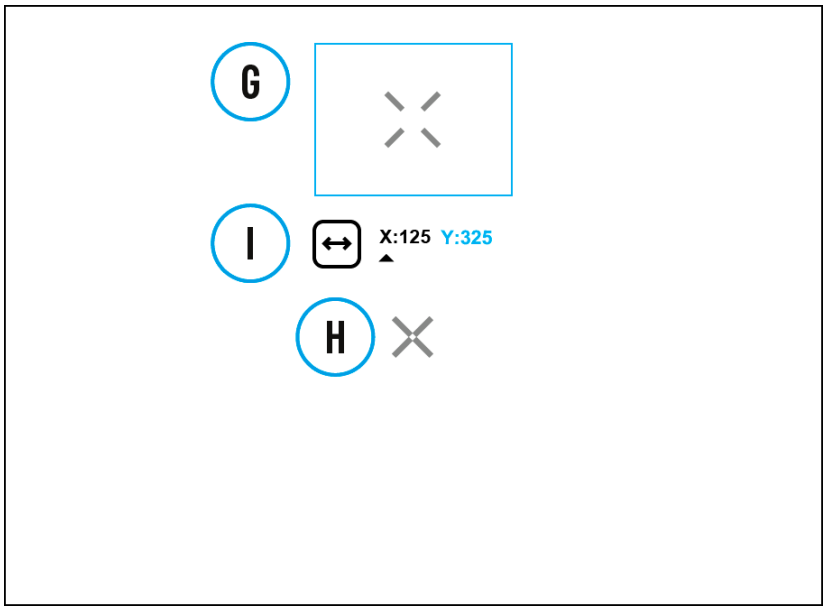

Step 1. Enter the menu to fix the defective pixels

1. Press and hold the **MENU (6)** button to enter the main menu.
2. Select the submenu **General Settings** with the **UP (5)/DOWN (7)** buttons.
3. A short press of the **MENU (6)** button opens the submenu.
4. Use the **UP (5)/DOWN (7)** buttons to select the **Defective Pixel Repair** menu item.
5. Press briefly the **MENU (6)** to open the submenu.
6. Select the **Defective Pixel Repair** option by briefly pressing the **MENU (6)** button.

Step 2. Select the defective pixel

1. A marker **(H)** appears on the centre of the display..
2. On the top side of the display appears a "magnifying glass" **(G)** – a magnified image in the frame with a fixed cross , designed for easier detection of a defective pixel and to match the pixel with the marker, and horizontal and vertical arrows for X and Y axes **(I)** showing the marker's movement.
3. With a short press of the **UP (5)/DOWN (7)** buttons move the marker to align it with a defective pixel.
4. Switch the direction of the marker from horizontal to vertical and vice versa with a short press of the **MENU (6)** button**.**
5. Align the defective pixel with the fixed cross in the frame – the pixel should disappear.

Step 3. Remove the defective pixel

1. Delete the defective pixel with a short press of the **ON/OFF (8).**

2. Once the pixel has been successfully deleted an **"OK"** message will briefly appear on the screen.
3. You can then delete another defective pixel by moving the marker across the display.
4. Exit the **Defective Pixel Repair** submenu with a long press of the **MENU (6).**

Warning! The display of a thermal imager may have 1- 2 pixels represented as bright white or coloured (blue, red) dots which cannot be deleted and are not a defect.

Restore Default Pixel Map

This option allows the user to return all previously disabled defective pixels to their original state.

1. Press and hold the **MENU (6)** button to enter the main menu.
2. Select the submenu **General Settings** with the **UP (5)/DOWN (7)** buttons.
3. A short press of the **MENU (6)** button opens the submenu.
4. Use the **UP (5)/DOWN (7)** buttons to select the **Defective Pixel Repair** icon.
5. Press the **MENU (6)** button to enter the submenu.
6. Use the **UP (5)/DOWN (7)** buttons to select the **Restore Default Pixel Map** icon.
7. Activate the function by briefly pressing the **MENU (6)** button.
8. Using the **UP (5)/DOWN (7)** buttons, select **Yes** if you want to return to the factory pixel map and select **No** if you do not.
9. Confirm your selection with a short press of the **MENU (6)** button.

Default Settings

1. A short press of the **MENU (6)** button opens the submenu **Default Settings** .
2. Select the **Yes** option to reset to factory settings or **No** to cancel using the **UP (5)/DOWN (7)** buttons.
3. Confirm your selection with a short press of the **MENU (6)** button.

- If **Yes** is selected, display will show **"Do you want to restore default settings?"** and **Yes** and **No** options. Select **Yes** to restore the default settings.
- Selecting the **No** option will cancel the reset and exit the submenu.

The following settings will be restored to their factory state before being set by the user:

- **Amplification Level** – Normal
- **Smoothing Filter** – Off
- **User Mode** – Off

- **Brightness level** – 10
- **Contrast level** – 8
- **Interface Size** – maximum
- **Video recorder mode** – video
- **Calibration mode** – automatic
- **Language** – English
- **Wi-Fi** – off (unique password)
- **Auto shutdown** – Off
- **Color palette** – White Hot
- **Video Compression** – Off
- **Wi-Fi Band** – 2.4 GHz

Attention! After restoring default settings, the date, time and user pixel map as well as the calibration profiles data entered by the user are saved.

Format

Formatting the built-in memory card permanently deletes all of the recorded files.

Formatting should be carried out in case of a memory card error.

Attention! Make sure that you no longer need the files to be deleted or create a backup on other media.

1. A short press of the **MENU (6)** button opens the submenu **Format** .
2. Select the **Yes** option to format or **No** to cancel using the **UP (5)/DOWN (7)** buttons.
3. Confirm your selection with a short press of the **MENU (6)** button.

- If **Yes** is selected, the message **"Do you want to format the memory card?"** appears on the display as well as **Yes** and **No** Select **Yes** to format the memory card.
- Selecting the **No** option will cancel the formatting and exit the submenu.

Display Alignment

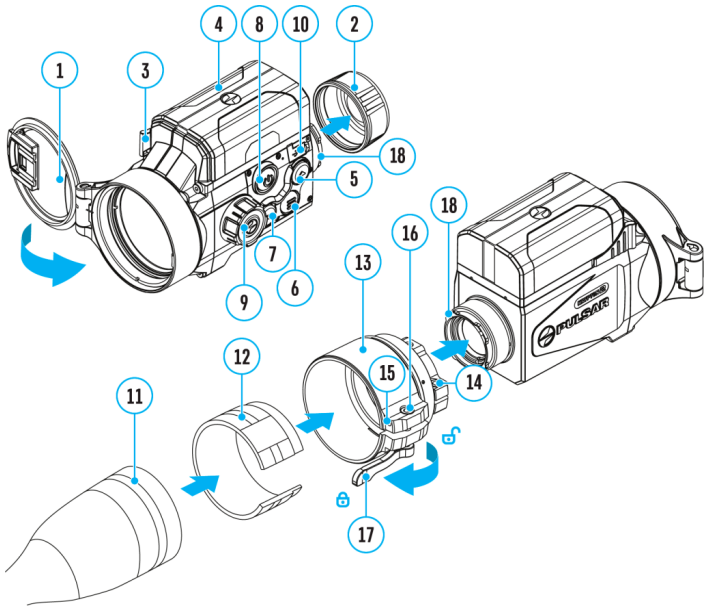

Before using the function, **install the attachment** on the optical riflescope using the adapter.

1. Press and hold the **MENU (6)** button to enter the menu.

2. Select the **Display Alignment** option with the **UP (5)/DOWN (7)** buttons.

3. A short press of the **MENU (6)** button opens the menu section. An auxiliary cross will appear on the screen.

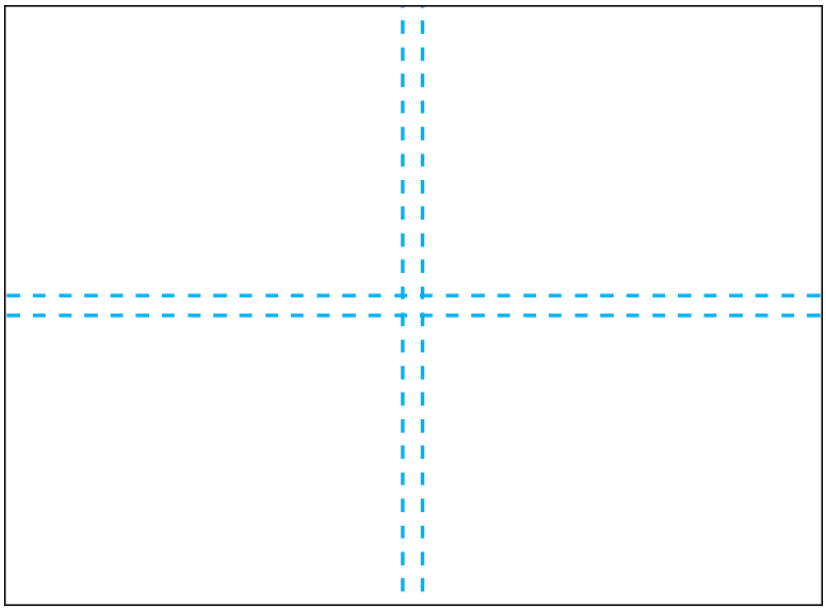

4. Loosen the fixing screw **(14)** on the adapter.

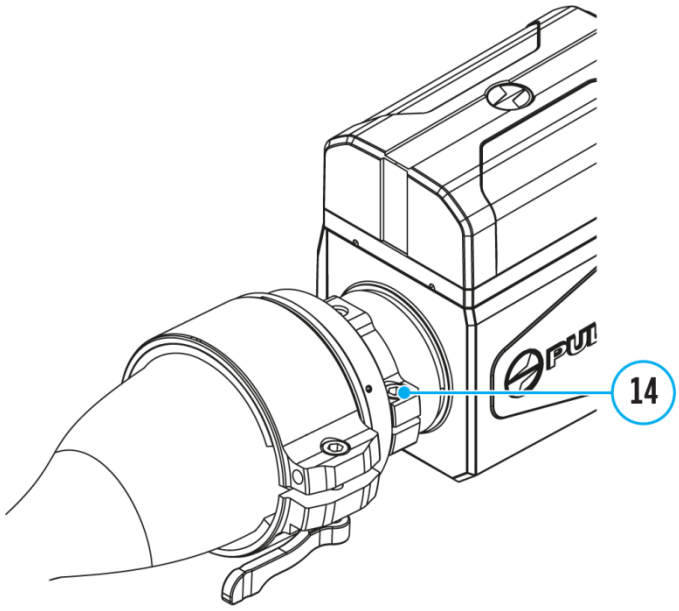

5. Tilt the attachment to align the reticle with the auxiliary cross.

6. Tighten the fixing screw **(14)**.

7. Exit the submenu with a long press of the **MENU (6).**

Bluetooth

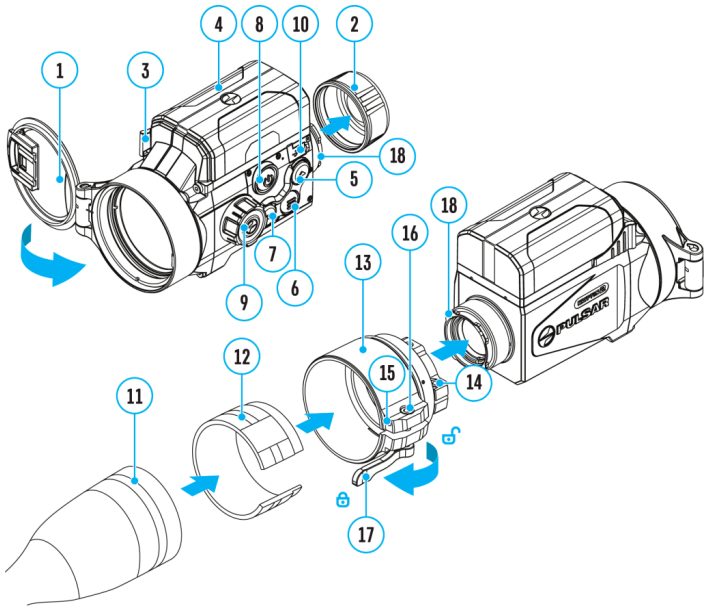

Turn on/off Bluetooth

1. Press and hold the **MENU (6)** button to enter the main menu.

2. Select the **Bluetooth** submenu with the **UP (5)/DOWN (7)** buttons.

3. A short press of the **MENU (6)** button opens the submenu.
4. Turn Bluetooth on/off with a short press of the **MENU (6)** button.
5. Press and hold down the **MENU (6)** button to exit the submenu.

The process of connecting the wireless remote control is described in the Remote Control Activation section.

Microphone

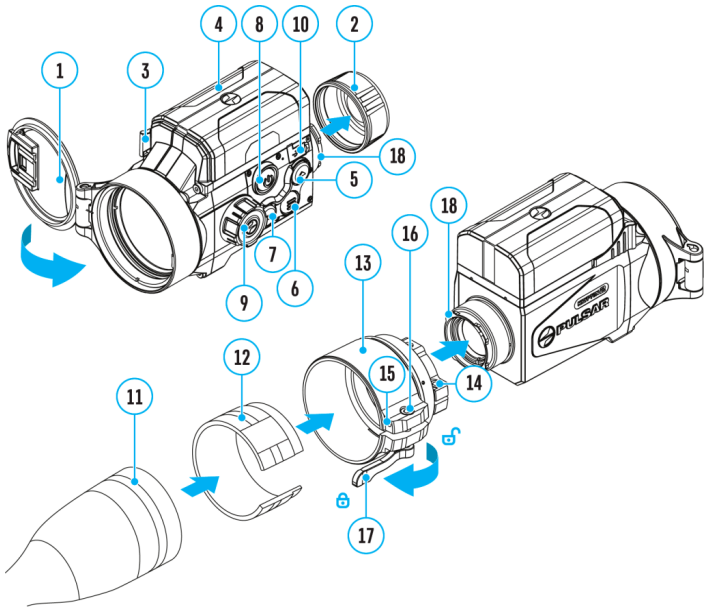

Turning microphone on/off.

This item allows you to enable (or disable) the microphone for recording sound during video recording.

1. Press and hold the **MENU (6)** button to enter the main menu
2. Select **Microphone** option with the **UP (5)/DOWN (7)** buttons.
3. A short press of the **MENU (6)** button opens the submenu.
4. To turn the microphone on or off, briefly press the **MENU (6)** button.

Icon Brightness

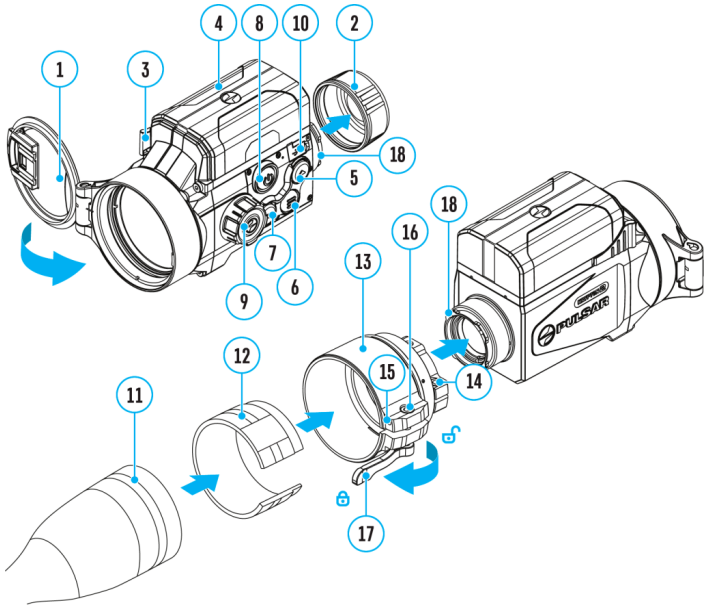

Adjust brightness level of the icons and screensavers (Pulsar, Display off) on the display.

1. Press and hold the **MENU (6)** button to enter the main menu.

2. Use the **UP (5)/DOWN (7)** buttons to select the **Icon Brightness** icon.

3. Press the **MENU (6)** button briefly to enter the submenu.
4. Use the **UP (5)/DOWN (7)** buttons to select the desired brightness level from 0 to 10.
5. Press the **MENU (6)** button briefly to confirm the selection.

Functions

Recoil recording

When recoil-activated recording is enabled , video recording starts **30 seconds before the first** detected shot and ends **30 seconds after the last shot**.

If additional shots are detected during recording, the recording continues in the same file, and the duration is extended by 30 seconds from each subsequent shot. The maximum length of a single video file is 5 minutes.

1. Open the main menu by pressing and holding the **MENU (6)** button.
2. Use the **UP (5)/DOWN (7)** buttons to select the **Recoil recording** menu item.
3. Open the submenu by briefly pressing the **MENU (6)** button.
4. Use the **UP (5)/DOWN (7)** buttons to select one of the following options: Off, High, Medium, Low.
5. Confirm the selection by briefly pressing the **MENU (6)** button.

Note:
To select the appropriate sensitivity level, it is recommended to make a test shot, for example, at a shooting range.

- If **Recoil recording** does not activate when firing, increase the sensitivity level.
- If recording starts automatically when shaking the weapon, decrease the sensitivity level.

Video Recording and Photography

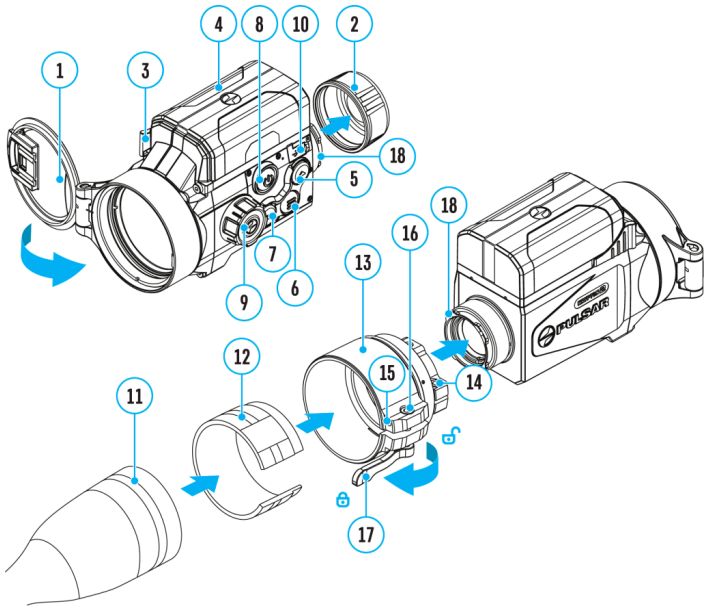

The **Krypton 2** thermal imaging attachments are equipped with a video recording (photography) function where the observed image can be saved on the built-in memory card.

Before using this feature please set the **date** and **time** (see General Settings section).

For information on how to watch recorded photos and videos, see the Stream Vision 2 user manual: Android, iOS.

The built-in recorder operates in two modes:

Video Mode. Video Recording

1. Switch to **Video** mode by pressing and holding the **UP/REC (5).**

2. The icon and the remaining recording time appear briefly on the screen in the format HH:MM (hours:minutes), for example, 5:12. In the status bar, the video recording status is displayed continuously.

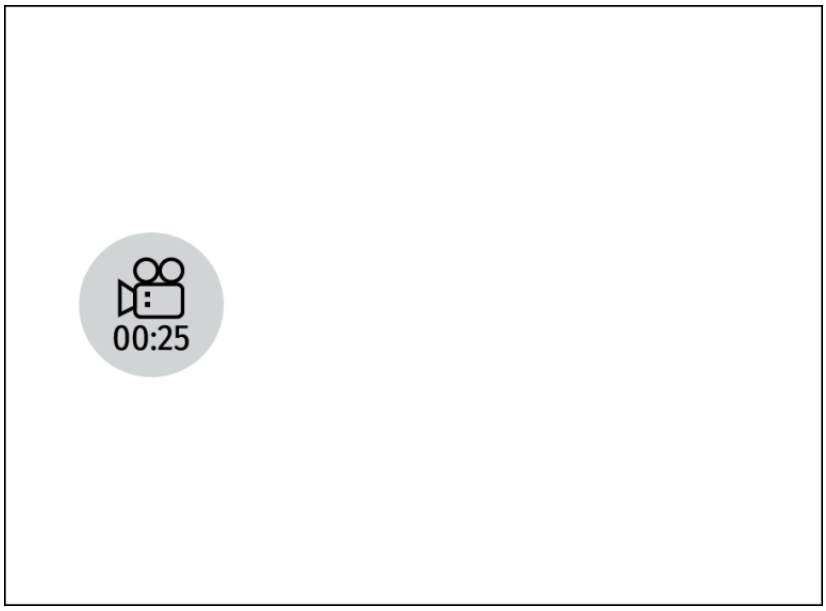

3. Press the **UP/REC (5)** button briefly to start video recording.

4. When the video recording starts, the icon will disappear and the REC icon and timer in MM:SS (Minutes:Seconds) format will appear.

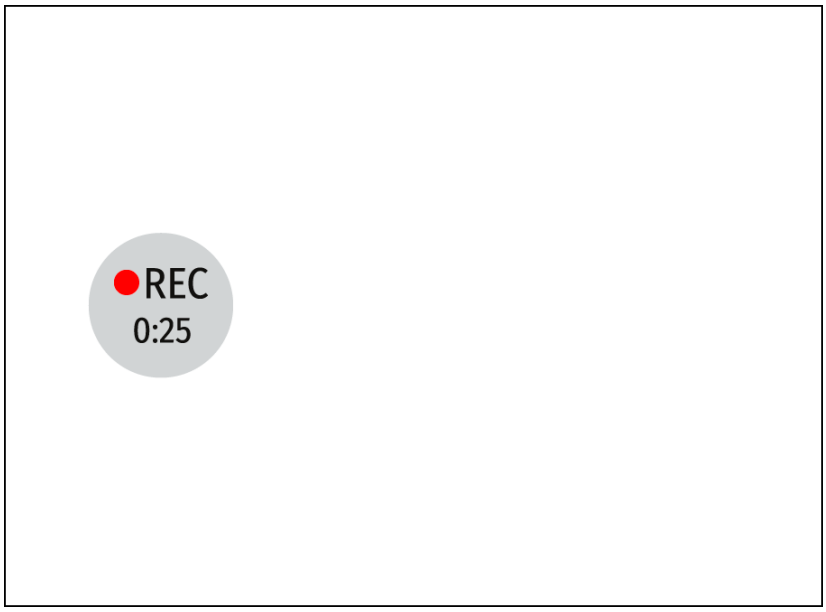

5. Press the **UP/REC (5)** button briefly to pause or resume video recording.

6. Press and hold the **UP/REC (5)** button to stop video recording.

7. Video files are saved to the built-in memory card after the video recording has been stopped.

8. Press and hold the **UP/REC (5)** button to switch between the video and photo modes.

Photo Mode. Capturing a photo

1. Switch to **Photo** mode by pressing and holding the **UP/REC (5)**

2. Press the **UP/REC (5)** button briefly to take a photo. The image freezes for 0.5 sec while the photo is saved to the internal memory.

Notes:

- You can enter and navigate the menu during video recording.
- The recorded videos and photos are saved to the built-in memory card of the device in the formats img_xxx.jpg (photos) and video_xxx. mp4 (video) where xxx is a 3 digit counter.
- The counter for multimedia files cannot be reset.

Attention!

- The maximum duration of a recorded video file is five minutes. After this time expires, the video is recorded to a new file.
- The number of files is limited by the device's built-in memory and video compression ratio.
- Regularly check the free capacity of the internal memory and move recorded footage to other storage media to free up space on the internal memory card.
- In case of a memory card error, you can use the format function in the General Settings section of the main menu.
- When the Display Off function is activated, video recording continues to run in the background.
- For automated recording of shots, activate **Recoil recording** in the main menu.

Wi-Fi Function

The device has a function enabling wireless communication with external devices (smartphone or tablet) via Wi-Fi.

- Turn on the wireless module in the **Wi-Fi Activation** menu option (see the **Wi-Fi** section).

Wi-Fi is displayed in the status bar as follows:

Connection Status	Indication on the status bar
Wi-Fi is switched off	
Wi-Fi connection is in progress	
Wi-Fi is switched on, no connection with device	
Wi-Fi is switched on, device connected	

- The device is recognized by an external device as KRYPTON2_XXXX where XXXX are the four last digits of the serial number.
- After entering the password on the external device (see the **Password Setup** subsection of the **Wi-Fi** section for more information on setting a password) and setting up a connection, the icon in the status bar changes to .
- The Wi-Fi function will turn off automatically if there is not enough battery power for Wi-Fi. The battery icon will turn red and flash. To use the Wi-Fi function again, you need to charge the battery.

Display-Off Function

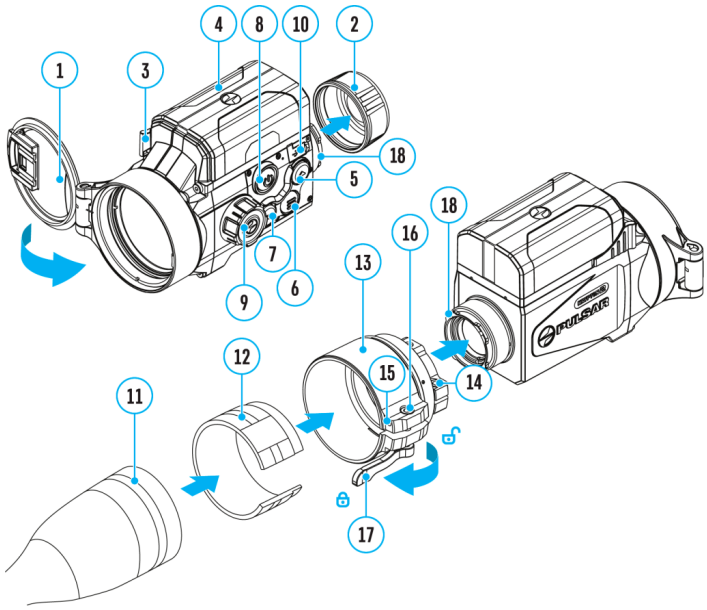

This function darkens the screen, which aids the user's concealment. However, the device stays on.

When this function is in use, the device switches to the standby mode, which allows it to be switched on instantly.

1. When the device is on, press and hold the **ON/OFF (8)** button. The display will turn off, the current time and the **"Display off"** icon will appear.
2. Turn the display back on with a short press of the **ON/OFF (8)** button.
3. When you press and hold the **ON/OFF (8)** button, the display shows the **"Display off"** icon with a countdown. Pressing & holding the button down for the duration of the countdown will power the device off completely.

Wireless Remote Control

Descriptions of Controls

The wireless remote control duplicates the functions of turning off the device, turning off the display, calibration, switching amplification levels and palettes, video recording and photographing, and it allows navigation through the menu.

Attention! The adhesive layer of the remote control mounting tape is intended for metal, glass, and most plastics. On wooden surfaces with coatings (varnish, oil, etc.), removal may cause damage. Use on such materials is not recommended.

	Controller (26)	**Button (27)**	**Button (28)**	**Button (29)**
Short press	Enter the quick menu and submenus of the main menu / confirm the selection / Switch to the next item of the quick menu	Turn the display on / Calibrate the microbolometer	Start video recording / Capture a photo	Switching amplification levels
Long press	Enter/exit the main menu / Exit the quick menu	Turn the display off / Turn the device off	Switch to photo/video mode	Interface resizing
Clockwise rotation	**Quick menu**	Increase parameter	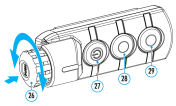	
	Main menu	Navigate downwards/clockwise		
Counter-clockwise rotation	**Quick menu**	Decrease parameter		
	Main menu	Navigate upwards/counterclockwise		

Remote Control Activation

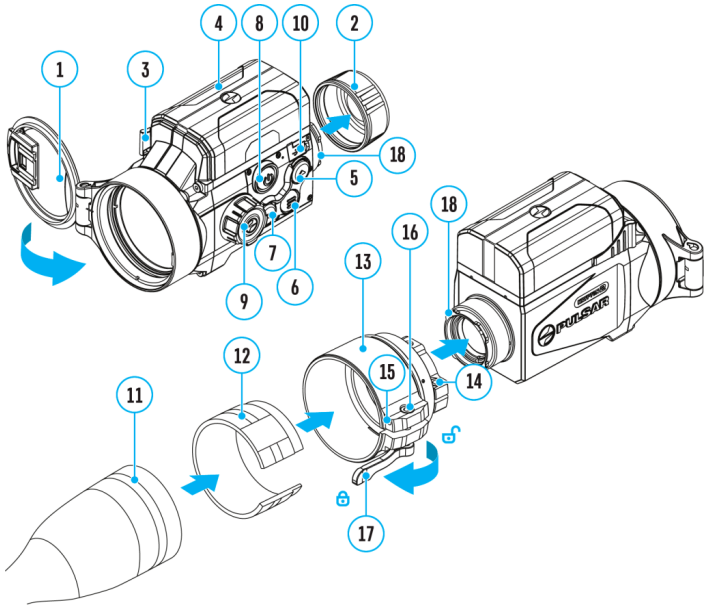

1. Turn on the Bluetooth module (see the **Bluetooth** section).

2. In the **Bluetooth** section of the menu, use the **UP (5)/DOWN (7)** buttons to select

   the **Connect remote control** menu item.

3. Confirm your selection with a short press of the **MENU (6)** button.
4. Press and hold any button on the Remote Control. The Remote Control is visible in the Bluetooth network and can be connected during this time.
5. Use the **UP (5)/DOWN (7)** buttons to select the remote control from the dropdown list that appears.
6. Confirm your selection with a short press of the **MENU (6)** button.

Notes:

- Once paired, the Remote Control can operate the Pulsar device.
- Going forward, the Remote Control will automatically connect to the paired device when within visible range.

- The name of the remote control and its battery charge level will appear in the list of paired devices at the bottom of the display in the **Bluetooth** section of the menu.

USB Connection

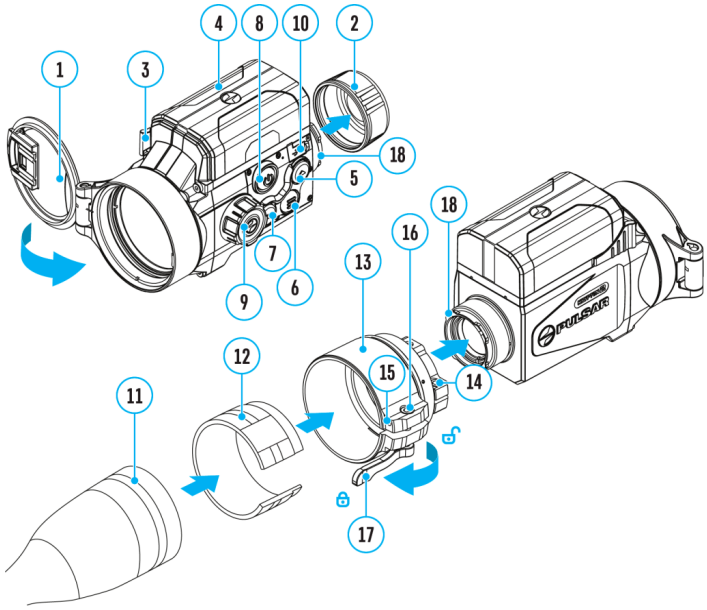

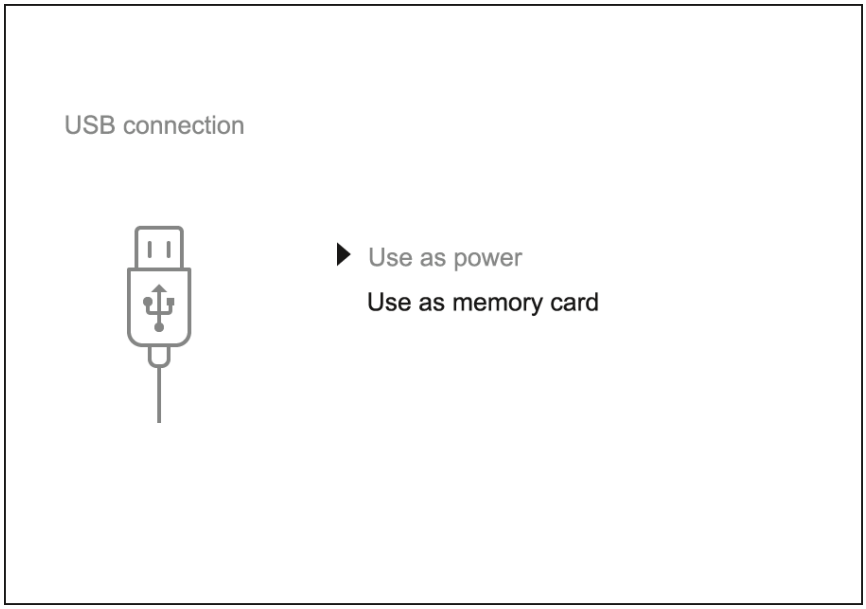

1. Connect one end of the USB cable **(20)** to the USB Type-C port **(10)** of your device and the other end to the USB port of your PC / laptop using a USB Type-A adapter.

2. Turn the device on with a short press of the **ON/OFF (8)** button (a device that has been turned off cannot be detected by your computer).
3. Your device will be detected by the computer automatically; no drivers need to be installed.
4. Two connection modes will appear on the display: **Power** and **Memory Card** (external storage device).
5. Select the connection mode with the **UP (5)/DOWN (7)** buttons.
6. Confirm the selection with a short press of the **MENU (6)** button.

Power

- In this mode, a PC/laptop is used as an external power supply. The status bar shows the icon —■=. The device continues operating and all functions are available.
- Battery recharge feasibility depends on your computer's USB port.
- When the USB is disconnected from the device when in the **Power** mode, the device keeps operating with the Battery Pack if it is available and sufficiently charged.

Memory Card (external memory)

- In this mode the device is detected by the computer as a flash card. This mode is designed for work with the files saved in the device's memory. The device's functions are not available in this mode; the device turns off automatically.
- If video recording was in progress when the connection was made, recording stops and the video is saved.
- If the device is in **Memory Card** mode and is disconnected from USB, the device will remain on.

Software

Stream Vision 2

Install the Stream Vision 2 application to download files, update firmware, control the device by remote control and broadcast images from your device to a smartphone or a tablet via Wi-Fi.

We recommend using the latest version – Stream Vision 2.

Mobile App
STREAM VISION 2

You can find further guidelines on Stream Vision 2 **here.**

Download from Google Play

Download from App Store

Find answers to frequently asked questions about using Stream Vision 2 **here**.

Android

iOS

Firmware Update

1. Download free Stream Vision 2 App in **Google Play** or **App Store**.
2. Connect your Pulsar device to your mobile device (smartphone or tablet).
3. Launch Stream Vision 2 and go to section “Settings”.
4. Select your Pulsar device and press “Check firmware update”.
5. Wait for the update to download and install. Pulsar device will reboot and will be ready to operate.

Important:

- if your Pulsar device is connected to phone, please turn on mobile data transfer (GPRS/3G/4G) to download update;
- if your Pulsar device is not connected to your phone but is already listed in “Settings” > “My devices” section, you may use Wi-Fi to download update.

Find answers to frequently asked questions about using Stream Vision 2 **here**.

Is your firmware up to date?

Click **here** to check the latest firmware for your device.

Maintenance

Technical Inspection

It is recommended to carry out a technical inspection before each use of the device. Check the following:

- The device appearance (there should be no cracks on the body).
- The state of the objective and eyepiece lenses of the attachment (there should be no cracks, grease spots, dirt or other deposits).
- The state of the rechargeable battery (it should be charged) and the electric contacts (there should be no signs of salts or oxidation).
- The controls should be in working order.
- The attachment is properly and firmly fixed on the riflescope.

Technical Maintenance and Storage

Maintenance should be carried out at least twice a year and include the following steps:

- Wipe the exterior metal and plastic surfaces with a cotton cloth to remove dust and dirt. To avoid damage to the paint coating, do not use chemically active substances, solvents, etc.
- Clean the electrical contacts of the rechargeable battery on the device using a non-greasy organic solvent.
- Check the eyepiece and the lens and if required remove dust and dirt from the optics (preferably using a non-contact method). Cleaning of the exterior surfaces of the optics should only be done with products specifically designed for this purpose.

- Always store the device in its carrying case in a dry, well-ventilated space. For prolonged storage, remove the batteries.
- Avoid getting repellent on the housing of the device. This may damage the appearance of the housing coating.

Troubleshooting

For technical assistance, please submit a request through our Support page.

The device does not turn on

Possible cause

The battery is completely discharged.

Solution

Charge the battery.

Device malfunction

Solution

In case of any malfunctions during operation, try resetting the device by long pressing the ON/OFF button for 10 seconds.

The device does not operate from an external power source

Possible cause

The USB cable is damaged.

Solution

Replace the USB cable.

Possible cause

The external power supply is discharged.

Solution

Charge the external power supply (if necessary).

Blurred image with vertical stripes or an uneven background

Possible cause

Calibration is required.

Solution

Perform image calibration according to the Calibration Mode section of the manual.

Poor quality image. There is noise or ghost images of previous scenes or objects

Possible cause

Manual calibration has been performed with the lens cover open.

Solution

Check the Calibration Mode, close the lens cover and calibrate the device.

Black screen after calibration

Solution

If the image does not clear after calibration, you need to recalibrate.

When the device is turned on, the calibration frequency is at first higher, then decreases (if the automatic calibration mode is enabled)

Possible cause

After turning on the device, it takes some time for the sensor temperature to stabilize. This is normal and is not a defect.

Image is too dark

Possible cause

Brightness or contrast level is too low.

Solution

Adjust the brightness or contrast in the Quick Menu.

Color bars appear on the display or the image disappears

Possible cause

The device was exposed to static charges during operation.

Solution

When the exposure to static charges is over, the device may either reboot automatically or require to be switched off and on again.

The image of the object being observed is missing

Possible cause

You are looking through glass.

Solution

Remove the glass or change the viewing position to avoid it.

The point of impact shifts after firing rounds

Possible cause

The attachment is configured so that after fitting onto an optical riflescope that had been properly zeroed, no adjustment of the aiming point is required.

Solution

Yet if point of impact change is observed after putting on the attachment, you can fix it with **display position calibration** procedure (see General Settings section).

Poor image quality / Reduced detection distance

Possible cause

These problems may occur during observation in adverse weather conditions (snow, rain, fog, etc.).

Smartphone or tablet cannot be connected to the device

Possible cause

Device password has been changed.

Solution

Delete the network and connect again using the password saved in the device.

Possible cause

The device is in an area with too many Wi-Fi networks that may be causing signal interference.

Solution

To ensure a stable Wi-Fi connection, relocate the device to an area with fewer or no Wi-Fi networks.

Solution

Switch the device's Wi-Fi bandwidth.

Possible cause

The device has a 5 GHz network enabled, but the smartphone only supports 2.4 GHz.

Solution

Switch the device's Wi-Fi bandwidth to 2.4 GHz.

More information on solving problems with connection to Stream Vision 2 by following the link.

Missing or interrupted broadcasting via Wi-Fi

Possible cause

The smartphone or tablet is beyond reliable Wi-Fi range. There are obstacles between the device and the signal receiver (e.g. concrete walls).

Solution

Move the devices in line-of-sight and within range of the Wi-Fi signal.

More information on solving problems with connection to Stream Vision 2 by following the link.

When the device is used in low temperature conditions the image quality is worse than in positive temperatures.

Possible cause

In positive temperature conditions, objects being observed (surroundings and background) heat up differently because of thermal conductivity, thereby generating a high temperature contrast. Consequently, the image quality produced by the thermal imager will be better.

In low-temperature conditions, objects being observed (background) will cool down to roughly the same temperature, which leads to a greatly reduced temperature contrast and a degraded image quality. This is normal for all thermal imaging devices.

Residual horizontal lines and traces of horizontally placed objects during observation process.

Possible cause

Algorithms that are used for image processing might sometimes cause traces of horizontal lines to temporarily appear on the image. This should not be considered as a

critical error.

Remote control does not work

Possible cause

The Bluetooth module is not turned on.

Solution

Turn on the Bluetooth module according to the instructions (see the Bluetooth section).

Possible cause

The Remote control is not activated.

Solution

Activate the remote control according to instructions (see the Remote Control Activation section).

Possible cause

The Remote Control is out of range of the device.

Solution

Return to the device coverage area.

Possible cause

Remote control battery low.

Solution

Install a new CR2032 battery as follows: unscrew the screws on the rear cover of the Remote Control, remove the cover, install a new battery, and screw the cover with screws.

Status bar not visible

Possible cause

The status bar may be partially or completely invisible due to the optical zoom of your riflescope. The lower the magnification, the more you see.

Solution

Decrease the riflescope magnification.

Solution

Reduce the size of the interface by long pressing the **DOWN/MODE (7)** button.

Solution

You can use the Stream Vision 2 app to see the full status bar on your smartphone screen.

Legal Compliances and Disclaimers

Attention! A license is required for Thermal Imaging Front Attachment Krypton when exporting outside your country.

Electromagnetic compatibility. This product complies with the requirements of European standard EN 55032: 2015, Class A.

Caution! Operation of this equipment in a residential environment could cause radio interference.

Updates of the Product. The manufacturer reserves the right at any time, without mandatory prior notice to the Customer, to make changes to the package contents (subject to the applicable laws, if any), design and characteristics that do not impair the quality of the Product.

Repair. Repair of the product is available within 5 years after purchase of the product.

Limitation of Liability. Subject to mandatory applicable laws and regulations: manufacturer will not be liable for any claims, actions, suits, proceedings, costs, expenses, damages or liabilities (if any), arising out of the use of this product. Operation and use of the product are the sole responsibility of the Customer. Manufacturer's sole undertaking is limited to providing the product(s) and related services in accordance with the terms and conditions of concluded transactions, including provisions established in warranty. The provision of products sold and services performed by Manufacturer to the Customer shall not be interpreted, construed, or regarded, either expressly or implied, as being for the benefit of or creating any obligation toward any third party (other than Distributor, Dealer, Buyer). Manufacturer's liability hereunder for damages, regardless of the form or action, shall not exceed the fees or other charges paid to Manufacturer for the product(s) and/or service(s).

MANUFACTURER WILL NOT BE LIABLE FOR LOST REVENUES OR INDIRECT, SPECIAL, INCIDENTAL, CONSEQUENTIAL, EXEMPLARY, OR PUNITIVE DAMAGES, EVEN IF THE MANUFACTURER KNEW OR SHOULD HAVE KNOWN THAT SUCH DAMAGES WERE POSSIBLE AND EVEN IF DIRECT DAMAGES DO NOT SATISFY A REMEDY.