MERGER LRF Manual

Specifications
About the device
- Description
- Package contents
- Components and controls
- Features

Power supply
- Precautions
- Recommendations For Battery Use
- Battery Charging
- Battery Installation
- Switching And Changing The Batteries
- External Power Supply

Getting Started
- Powering on and image settings
- Button Operation

Interface
- Status bar
- Quick Menu
- Main Menu
  - Enter the main menu
  - Amplification level
  - Colour Modes
  - Smoothing Filter
  - User Mode
  - PiP Mode
  - Display Settings
  - Image Stabilization
  - Bluetooth
  - Wi-Fi Settings
  - Microphone
  - Ballistics
  - Rangefinder
  - Calibration Mode
  - General Settings
  - Defective Pixel Repair
    - Defective Pixel Repair
    - Restore default pixel map
  - Device Information

Functions
- Video Recording And Photography
- Laser Rangefinder
- Ballistics calculator
- Discrete Digital Zoom
- PIP Function
- Display-Off Function
- Wi-Fi Function
- Installing the Device on a Tripod
- USB Connection

Software
- Stream Vision 2
- Firmware Update

Maintenance
- Technical Inspection
- Technical Maintenance
- Storage

Troubleshooting
- The device does not turn on
- Device malfunction
- The device does not operate on external power supply
- The image is blurry, with vertical stripes and uneven background
- Black screen after calibration
- When the device is turned on, the calibration frequency is at first higher, then decreases (if the automatic calibration mode is enabled)
- Colored lines appeared on display or image has disappeared
- The image is too dark
- Poor image quality / Detection range reduced
- Smartphone or tablet cannot be connected to the device
- Wi-Fi signal is missing or interrupted
- The image of the object being observed is missing
- There are several light or black dots (pixels) on device's displays or microbolometer
- When using the device at below zero temperatures the image quality is worse than at positive temperatures
- Rangefinder will not measure distance
- Large measurement error
- The image borders on the display move while the stabilization function is active
- The image moves while the image stabilization function is active at high magnification

Legal Compliances and Disclaimers

Specifications

Model	**LRF XT50**
SKU	77486
Microbolometer	
Type	uncooled
Resolution, pixels	1280x1024
Pixel Pitch, µm	12
Sensor NETD, mK	< 40
System NETD, mK	< 20
Frame rate, Hz	50
Optical Characteristics	
Lens, mm	F50 F/1.0
Continuous digital zoom, x	2-16
Digital zoom	x1/x2/x4/x8
Minimum Focus Distance, m/y	5 / 5.47
Eye relief, mm/inch	15 / 0.59
Exit pupil diameter, mm	3.5
Field of view (HxV), degrees / m@100m	17.5 / 30.7
Diopter adjustment, D	-5/+4
Interpupillary distance adjustment, mm	63-74
Range of detection (deer type object), m/y	2300 / 2515

Display	
Type	AMOLED
Resolution, pixels	1280x960
Operational Characteristics	
Power supply, V	3.7
Battery type / Capacity / Output voltage	Li-Ion Battery Pack APS3 / 3200 mAh / DC 3.7 V (removable) Li-Ion Battery Pack / 4000 mAh / DC 3.7 V (built-in)
External power supply	5V
Operating time on Battery Pack (at t=22°C), h*	6
Degree of protection, IP code (IEC60529)	IPX7
Operating temperature range, °C /° F	-25 ... +50 / -13 ... 122
Dimensions, mm / inch	197x140x72 / 7.8×5.5×2.8
Weight (with battery), kg / oz	0.95 / 34
Video Recorder	
Video / photo resolution, pixel	1280x960
Video / photo format	.mp4 / .jpg
Built-in memory	64 Gb
Wi-Fi Channel**	
Frequency	2.4/5 GHz
Standard	IEEE 802.11 b/g/n/ac
Characteristics of the Rangefinder	
Wavelength, nm	905
Max. measuring range***, m/y	1500 / 1640
Measurement accuracy, m	+/-1

*Actual operating time depends on the extent of using Wi-Fi, integrated video recorder and integrated laser rangefinder.

**The reception range may vary depending on various factors: obstacles, other Wi-Fi networks.

***Depends on the characteristics of the object under observation and environmental conditions.

About the device

Description

Merger LRF thermal imaging binoculars are made with the external design of classic daytime binoculars and provide comfortable viewing with both eyes.

Merger LRF binoculars accommodate day and nighttime observations. **Merger LRF** provide exceptional image quality even in adverse weather conditions (fog, smog, rain) and beyond obstacles like branches, tall grass, dense foliage, etc. known to hinder target detection.

Merger LRF devices do not require an external light source and are not affected by bright light exposure.

These binoculars are equipped with a precise built-in laser rangefinger capable of measuring distances up to 1500 m accurately (± 1 m).

Merger LRF thermal imaging binoculars are perfectly suited for night hunting, observation, trail orientation, identifying hazards, rescue operations, etc.

To get started, see the sections:

Battery Charging

Battery Installation

Powering on and Image Setting

Laser Rangefinder

Stream Vision 2

Package contents

- Merger thermal binocular
- APS3 Battery Pack (2 pcs.)
- APS battery charger
- Power adapter
- USB Type-C cable with USB Type-A adapter
- Carrying case
- Neck strap
- Quick-Start guide
- Lens cloth
- Warranty card
- Tripod adapter

Components and controls

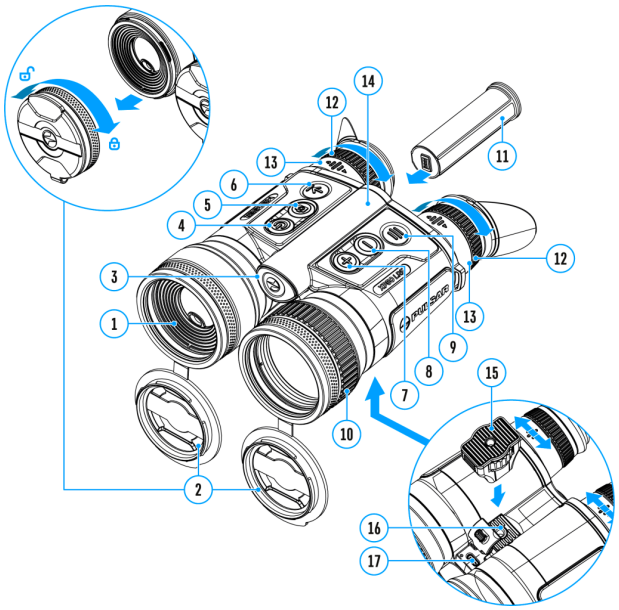

1. Laser rangefinder
2. Removable lens covers
3. Battery release button
4. Power ON/OFF/Calibration button
5. REC button
6. LRF button
7. UP/ZOOM navigation button
8. DOWN navigation button
9. MENU button
10. Lens focus ring
11. Battery APS 3
12. Eyepiece dioptre rings
13. Eyepieces
14. Battery compartment
15. Tripod adapter
16. Tripod adapter socket
17. USB Type-C port

Features

- AMOLED displays with a resolution of 1280x960
- Classic daytime binocular design
- 9-color display palette
- 3 calibration modes: manual, semi-automatic and automatic
- Long detection distance
- Smooth digital zoom
- 3 levels of sensitivity enhancement: Normal, High, Ultra
- “Picture-in-Picture” mode
- Built-in laser rangefinder (up to 1500 m)
- Display functions turn off with the proximity sensor
- Display dimming function
- Auto shutdown function

- Image stabilization function
- Defective Pixel Repair function
- Device firmware update using the free Stream Vision 2 App
- Wide operating temperature range -25 °C – +50°C (-13 °F – +122 °F)
- Completely waterproof IPX7
- Ballistic calculator
- 3 display shapes
- Tripod mount

Video/Audio Recording

- Built-in video and sound recorder
- Integration with iOS and Android devices
- Wi-Fi remote control and viewing using a smartphone
- Storing photos and videos in Cloud when using the Stream Vision 2 App

Battery Pack

- Quick Change Li-Ion Battery Pack APS 3
- Charging from USB Power Bank
- Quick-Charge power delivery

Power supply

Precautions

- Only use the charger supplied with the Battery Pack. The use of any other charger may irreparably damage the Battery Pack or the charger and may cause fire.
- Do not charge the built-in and removable batteries immediately after moving the device and batteries from a cold place to a warm place. Wait at least 30 minutes for the device and batteries to warm up.
- It is not recommended to charge the batteries with a charger connected to the USB port of a computer or laptop. It can damage the computer.
- Do not leave the Battery Pack unattended while charging.
- Never use a modified or damaged charger.
- Do not leave the Battery Pack with a charger connected to the power adapter after charging is complete.
- Do not expose batteries to high temperatures or to a naked flame.
- Do not use batteries as a power source for devices that do not support APS batteries.
- Do not disassemble or bend batteries or charger.
- Do not drop or strike batteries or charger.
- Batteries and charger are not designed to be immersed in water.
- Keep the Battery Pack out of the reach of children.

Recommendations For Battery Use

- For long-term storage, the built-in and removable batteries should be partially charged – from 50 to 80%.

- Batteries should be charged at an ambient temperature of 0 °C ... +35 °C. Otherwise, battery life will be significantly reduced.
- When using batteries at sub-zero ambient temperatures, the battery capacity decreases, this is normal and not a defect.
- Do not use batteries at temperatures outside the range of -25 °C ... +50 °C – it may reduce the battery life.
- The battery has a short-circuit protection. Any situation that may cause short-circuiting, however, should be avoided.

Battery Charging

Merger LRF binoculars are supplied with a removable and rechargeable APS3 lithium-ion battery pack and a built-in rechargeable lithium-ion battery. The batteries should be charged before first use.

The icons in the status bar will flash when the battery is low. The batteries need to be charged.

Option 1

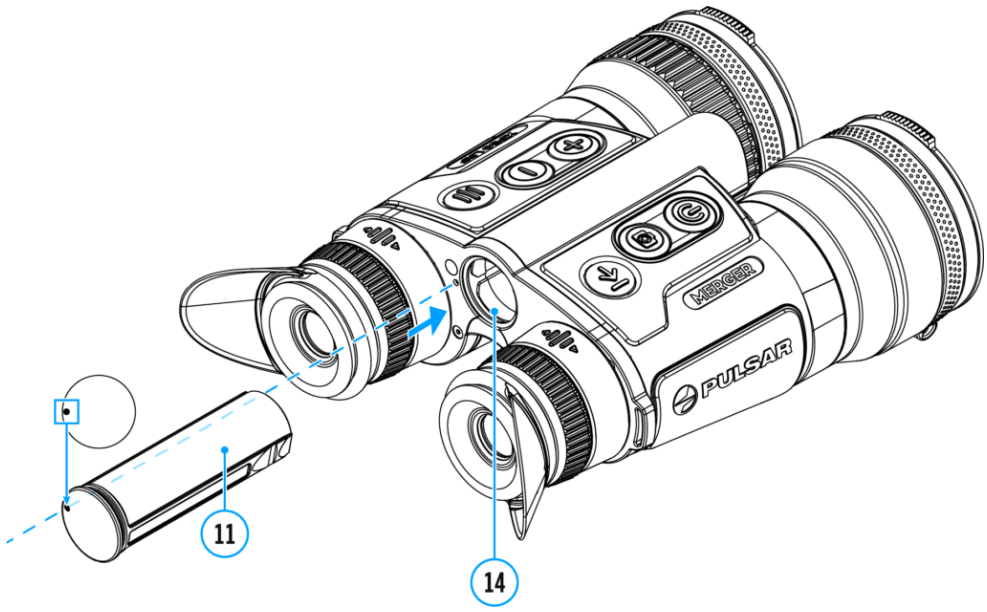

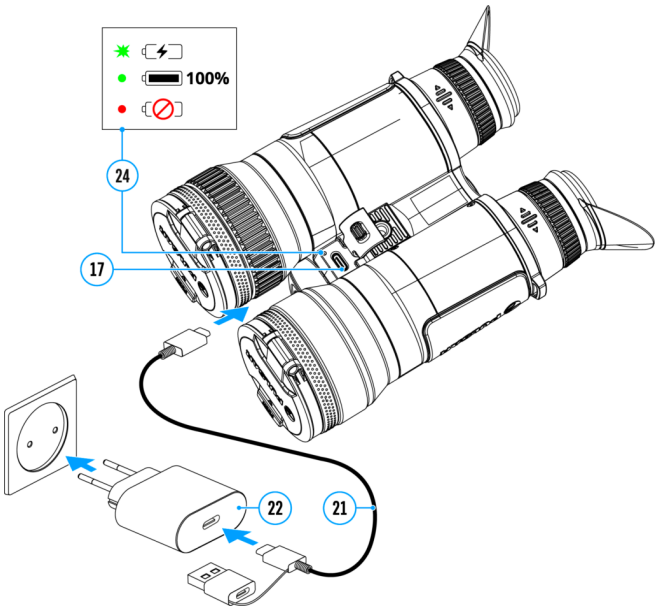

1. **Install** the APS 3 battery **(11)** in the battery compartment **(14)** of the device.
2. Connect the USB Type-C cable **(21)** to the USB Type-C connector **(17)** of the device.
3. Connect the other end of the USB cable **(21)** to the Power Adapter **(22)** by removing the USB Type-A adapter.
4. Plug the Power Adapter **(22)** into a 100-240 V socket**.**
5. Wait until the batteries are fully charged (indication in the status bar: 1 100 2 100; 1 – built-in battery, 2 – removable battery).

Note: next to the USB Type-C connector **(17)** on the device body there is a light-emitting diode **(24)** to indicate the battery charge level when the device is switched off.

(24) LED indication	**Battery status**
✸	Batteries are charging
●	Batteries are charged
●	One of the batteries is defective. The device must not be used. The defective battery should be replaced. Contact Pulsar service to replace the internal battery.
–	There is no external battery in the device, or the device is switched on

Attention! When charging rechargeable batteries via a USB Type-C connector **(17)** in the device body section:

- Charging priority is given to the built-in battery.

- When the device is off, both batteries are charged at the same time. When using the device, the external battery is discharged first.
- Built-in and removable batteries support USB Power Delivery fast charging technology when using the USB Type-C cable and power adapter supplied with the device.

Option 2

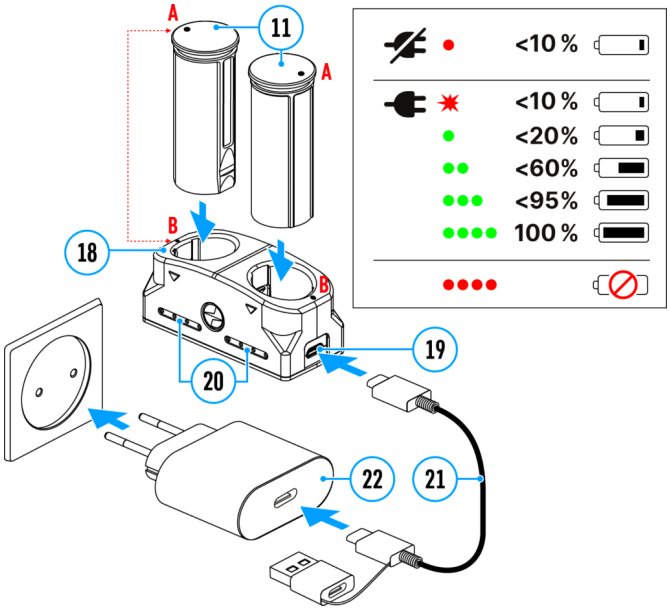

1. Insert the Battery Pack **(11)** along the rail into the APS charger **(18)** slot as far as it will go. The APS charger is supplied with your device or purchased separately.
2. Point **A** on the battery and point **B** on the charger should match.
3. Connect the USB Type-C plug of the USB cable **(21)** to the port **(19)** of the charger **(18)**.
4. Connect the second plug of the USB cable **(21)** to the USB port on the power adapter **(22)**.
5. Plug the device into a 100-240 V socket.
6. The LED indicator **(20)** will display battery charge status.
7. Wait until the battery is fully charged (LED indication **(20)**: ●●●●).
8. Two batteries can be charged at the same time: the second slot is designed for it.

(20) LED Indicator*	**Battery Charge Status**

✸	Battery level is from 0% to 10%. Charger is connected to a power supply.
●	Battery level is from 0% to 10%. Charger is not connected to a power supply.
●	Battery level is from 10% to 20%.
●●	Battery level is from 20% to 60%.
●●●	Battery level is from 60% to 95%.
●●●●	Battery completely charged. Charging will automatically stop. The battery can be disconnected from the charger.
●●●●	Defective battery. Do not use the battery.

* LED indicator displays the current battery charge status for 30 seconds when the APS charger is not plugged in. When the power is being supplied, the indicator is constantly displaying the current battery charge status, the LEDs are additionally flickering to display the battery charging process.

Battery Installation

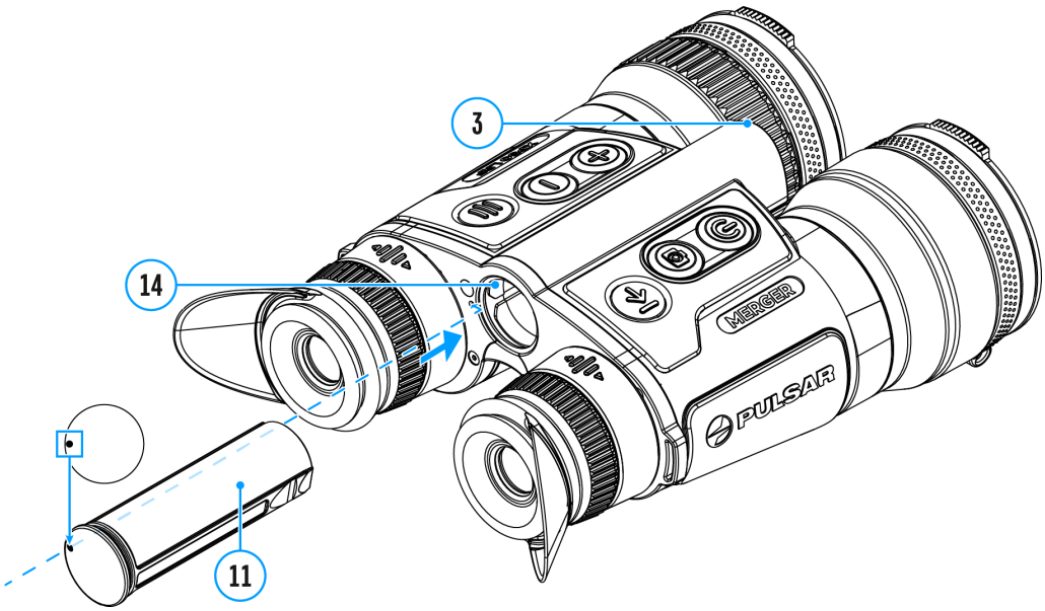

Attention! Before installing the battery, make sure that there is an undamaged rubber insulating ring on the battery. The ring is designed to protect your device from moisture getting inside. Damage to the device due to a missing ring is not covered by the warranty. To replace or purchase a ring, contact your **local distributor.**

1. Install the battery **(11)** into the battery compartment **(14)**. A pictogram in the form of a “dot” on the battery should be on the left.
2. You will hear a click when the battery is placed correctly.
3. To remove the battery from the device, press the Battery Release button **(3)**.

Switching And Changing The Batteries

Merger LRF devices are powered by 2 batteries: built-in Battery Pack and removable Battery Pack APS3.

---

1. If there are two batteries in the device at the same time, two battery icons are displayed in the status bar (1 – built-in battery, 2 – removable battery). The device battery is displayed in white, inactive – in grey.
2. When there is no removable battery in the device, only one icon for the built-in battery displays in white in the status bar.
3. When both batteries are fully charged, the device is powered by the removable battery. If there is low removable battery level, the device will switch to the built-in battery.
4. Battery charge level is displayed in % above the icon in the status bar while charging.
5. It is possible to replace the removable battery even while the device is on.

Attention! When installing a removable battery with a sufficient charge level, the device will automatically switch to it.

External Power Supply

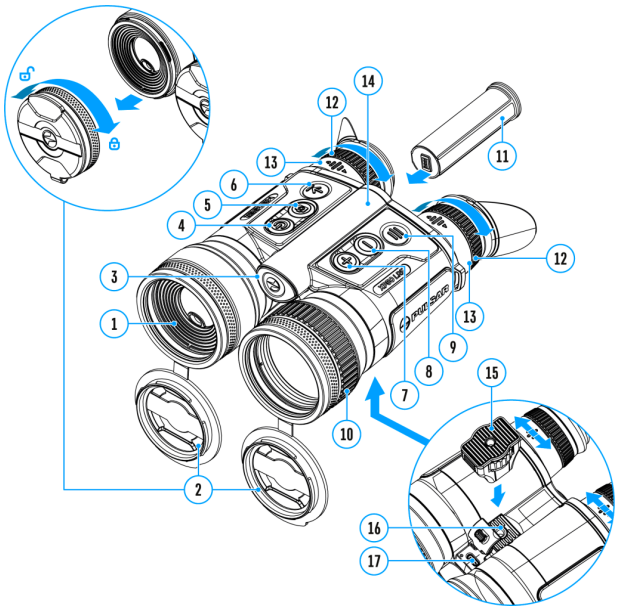

Power can be supplied from an external source such as a 5 V power bank.

1. Connect the external power supply to the USB Type-C port **(17)** of the device.
2. The device switches to external power source, while built-in Battery Pack and removable Battery Pack APS3 will gradually recharge.
3. The display will show the battery icon 100 with charge level as a percentage.
4. If the device is powered by an external power supply, but the APS3 battery is not connected, only the built-in battery will be charged.
5. When the external power supply is disconnected, the device switches to the internal battery pack without powering off.

Warning! Charging the built-in battery and the APS3 battery from the power bank at an external temperature below 0 °C (32 °F) can reduce the battery life. When using external power, connect the Power Bank to the device after it has been turned on and working for several minutes.

Getting Started

Powering on and image settings

1. Open the lens covers **(2)**.
2. Turn the device on with a short press of the **ON/OFF (4)** button.
3. **Adjust the interpupillary distance** by moving the eyepieces **(13)** farther or closer to each other. It takes some effort to move the eyepieces.
4. Adjust the symbol sharpness on the displays by rotating the eyepiece dioptre rings **(12)**. In future, it will not be necessary to rotate the eyepiece dioptre rings, regardless of the distance and other conditions.
5. To focus on the object being observed rotate the lens focusing ring **(10)**.
6. Select the **calibration mode**: **manual (M), semi-automatic (SA)** or **automatic (A)** in the main menu (enter the menu by long pressing the **MENU (9)** button).
7. Calibrate the image with a short press of the **ON/OFF (4)** button (when calibration mode **(SA)** or **(M)** has been selected). Close the lens cap before manual calibration.
8. Select the required **amplification level** ("Normal", "High", "Ultra") by briefly pressing the **DOWN (8)** button.
9. Adjust the brightness, display contrast, smooth digital zoom in the **quick menu** (activate by briefly pressing the **MENU (9)** button).
10. Press the **LRF (6)** button briefly to start the **rangefinder**. The rangefinder reticle will appear in the center of the image (the rangefinder mark appears in the centre of the image). Briefly press the **LRF (6)** button to measure the distance. Press and hold down the **LRF (6)** button for 2 seconds to measure the distance in scan mode. If the rangefinder is idle longer than for 4 seconds, it turns off automatically.
11. After use, press and hold down the **ON/OFF (4)** button to turn the device off.

Notes:

- To prevent accidental decamouflage of the user, the displays automatically turn off when the observer moves the device away from the face.
- When the device approaches the face, the displays will automatically turn on.
- The proximity sensor can be disabled/enabled in the **“General settings”** section of the main menu.

Observation conditions: time of day, weather, different observation objects affect the image quality. Custom settings for brightness, display contrast as well as the function of adjusting the microbolometer sensitivity level will help to achieve the desired quality in a particular situation.

Warning! Never point the lens at intensive energy sources such as laser radiation emitting devices or the sun. It can damage electronic components in the device. The warranty does not cover damage arising from failure to comply with operating instructions.

Button Operation

Operation	Button	
Power device on	⏻	short press
Power device off	⏻	long press for 3 secs
Turn display off (if the **proximity sensor** is off)	⏻	long press for less than 3 secs
Turn display on (if the **proximity sensor** is off)	⏻	short press
Calibrate the microbolometer	⏻	short press
Control discrete digital zoom	⊕	short press
Image stabilization on/off	⊕	long press
Switching amplification levels	⊖	short press

Turn on/off the White Hot palette		long press
Video Recorder	**Button**	
Start/pause/resume video recording		short press
Stop video recording		long press
Switch to video / photo		long press
Capture Photo		short press
Main Menu	**Button**	
Enter main menu		long press
Navigation upwards/rightwards		short press
Navigation downwards/leftwards		short press
Confirm selection		short press
Exit submenu without confirming selection		long press
Exit menu (switch to viewing mode)		long press
Quick Menu	**Button**	
Enter quick menu		short press
Switch between quick menu options		short press
Increase value		short press
Decrease value		short press
Exit quick menu		long press
Rangefinder	**Button**	
Activate rangefinder		short press
Measure distance		short press
Start/stop SCAN mode		long press

Interface

Status bar

The status bar is at the bottom of the image and shows information on the actual operating status of the device, including:

1. Colour Mode:

– White hot

– Black hot

2. Image stabilization (displayed when the function is on)

3. Amplification level (e.g., Normal)

4. Smoothing Filter (displayed when the function is on)

5. Calibration mode (a countdown timer :05 will appear instead of the calibration icon when in automatic calibration mode with 5 seconds remaining until automatic calibration)

6. Current magnification

7. Microphone

8. Bluetooth:

– Bluetooth is on

– the device with Bluetooth is connected

9. Wi-Fi connection

10. Clock

11. Power supply:

- Battery discharge level (when the device is powered by a built-in or removable battery).
- External battery power indicator (if the device is powered by an external power supply).
- Battery indicator with current percentage of charge (when charging from an external power source).
- Battery indicator shows a low battery charge
- Battery indicator shows a low internal battery charge

Quick Menu

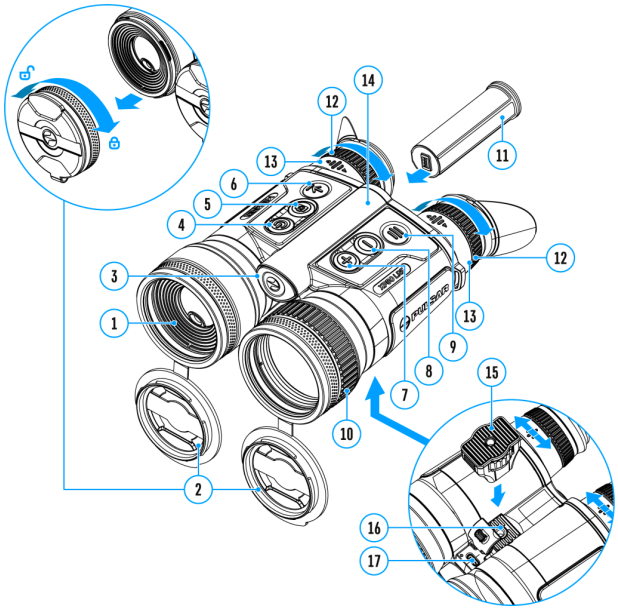

The quick menu allows you to access the main device settings, such as adjusting the display brightness and contrast, and smooth digital zoom.

- Enter the menu with a short press of the **MENU (9)** button.
- To toggle between the functions below, press successively the **MENU (9)** button.

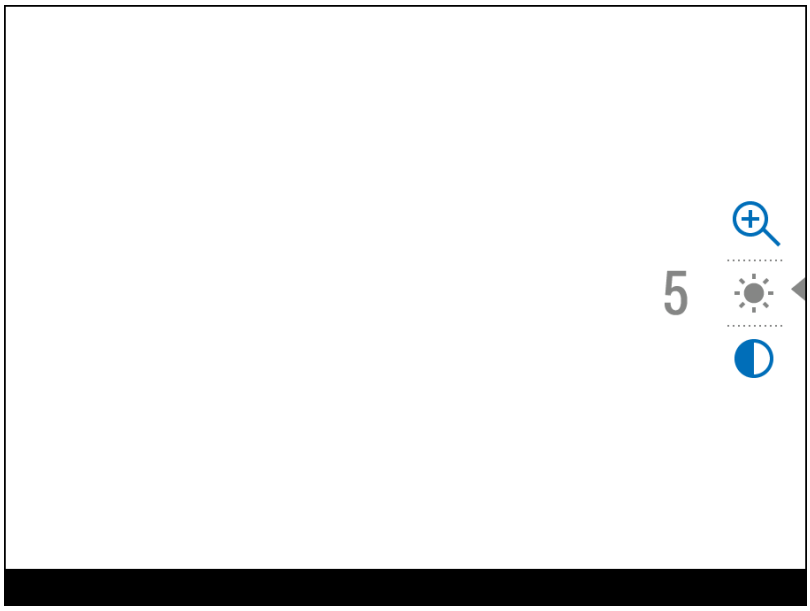

Brightness – press briefly the **UP (7)/DOWN (8)** buttons to change display brightness from 0 to 20.

Contrast – press briefly the **UP (7)/DOWN (8)** buttons to change display contrast from 0 to 20.

Smooth digital zoom – press the **UP (7)/DOWN (8)** buttons to change digital zoom.

Smooth digital zoom is in 0.1x increments.

Note: the magnification value is reset to the base value when the device is switched off

- To exit quick menu, press and hold down the **MENU (9)** button or wait 5 sec for automatic exit.

Main Menu

Enter the main menu

1. Enter the main menu with a long press of the **MENU (9)** button.
2. Press the **UP (7)/DOWN (8)** buttons to switch between the menu options.

3. Enter a menu option with a brief press of the **MENU (9)** button.
4. Exit the menu with a long press of the **MENU (9)** button.
5. Automatic exit takes place in 10 sec of inactivity (buttons are not pressed).

Note: When entering the main menu, the background image darkens to enhance the menu visibility. This is normal and not a defect.

General View of the Menu

Tab 1

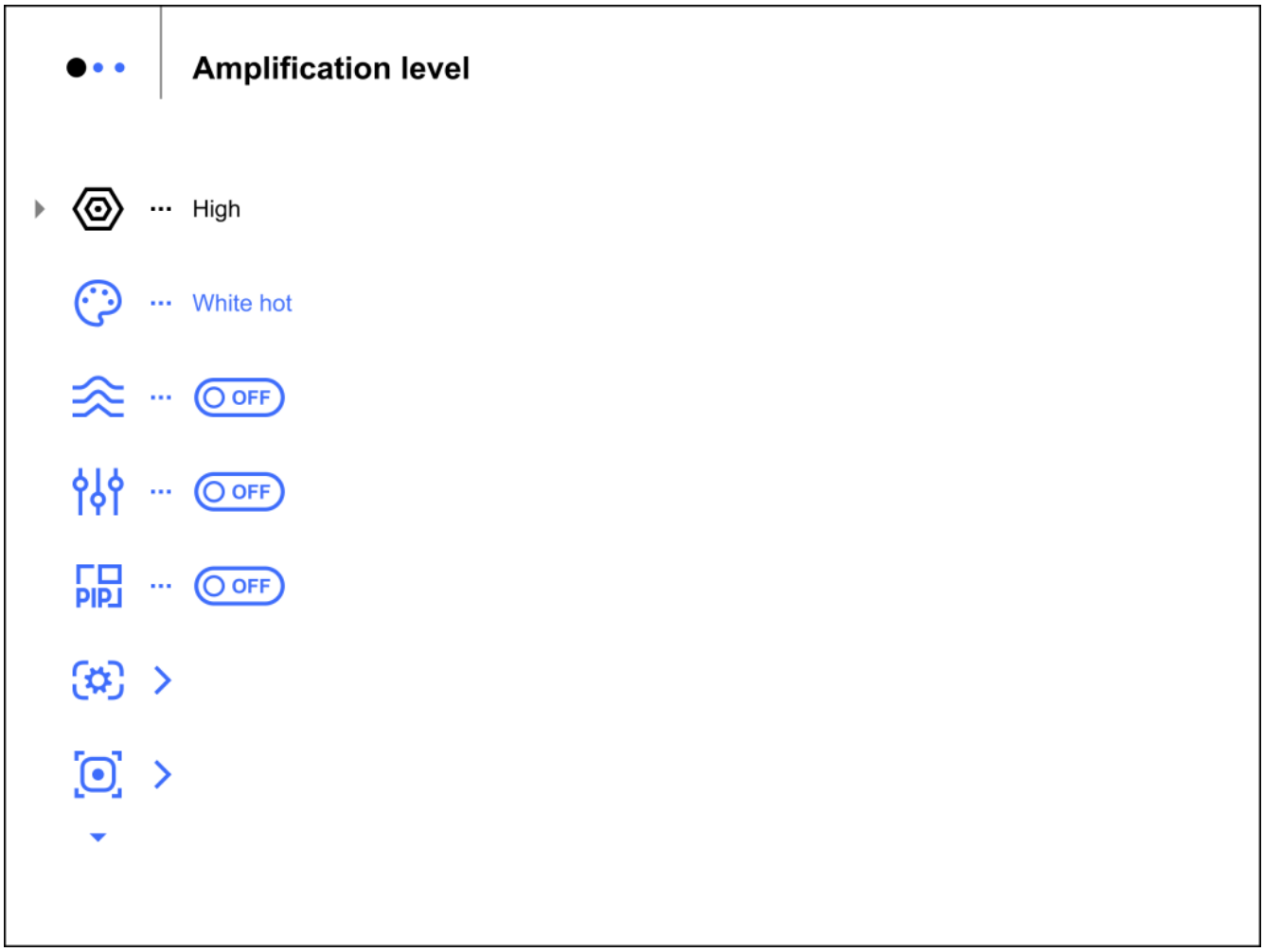

Tab 2

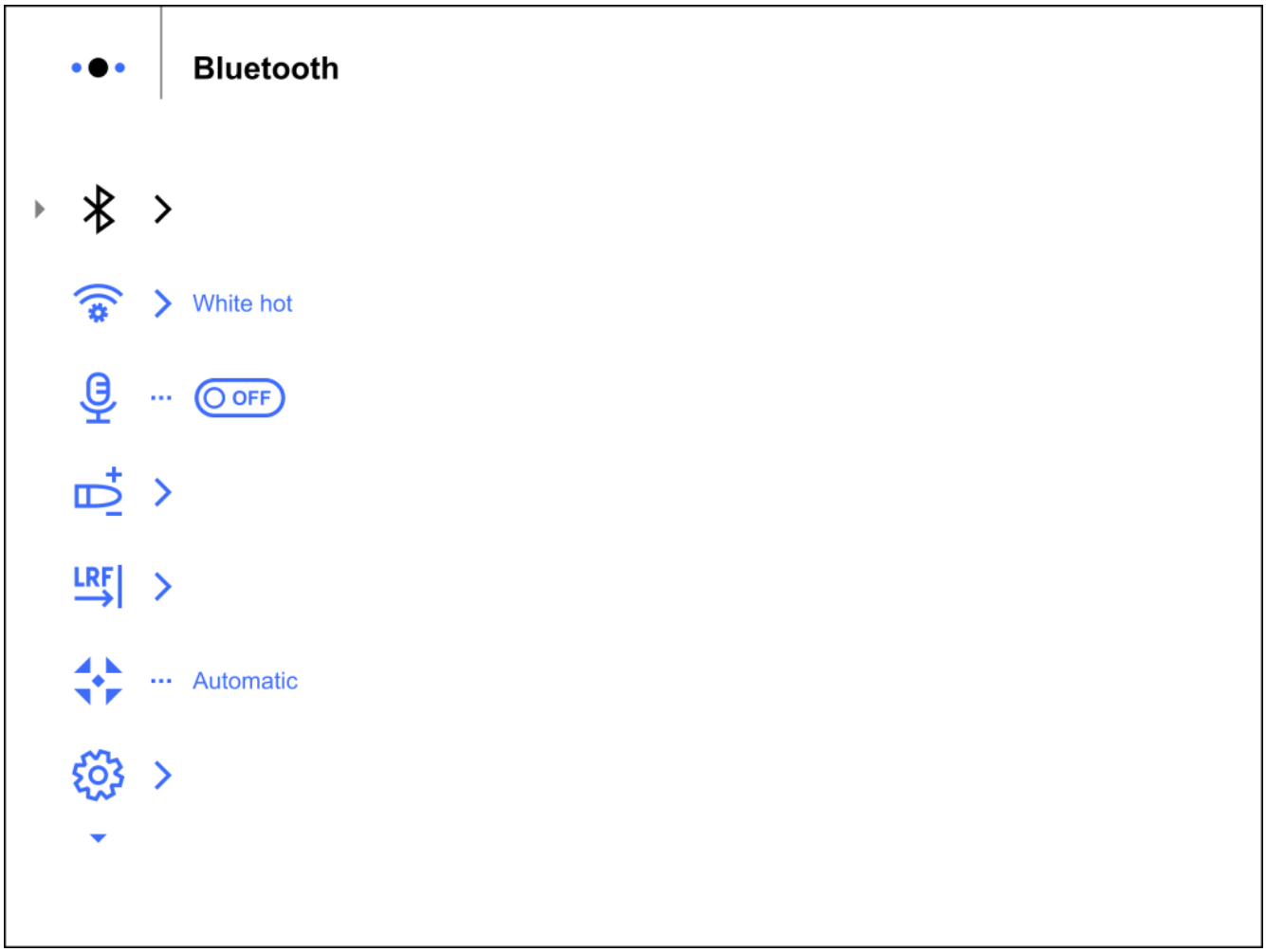

Tab 3

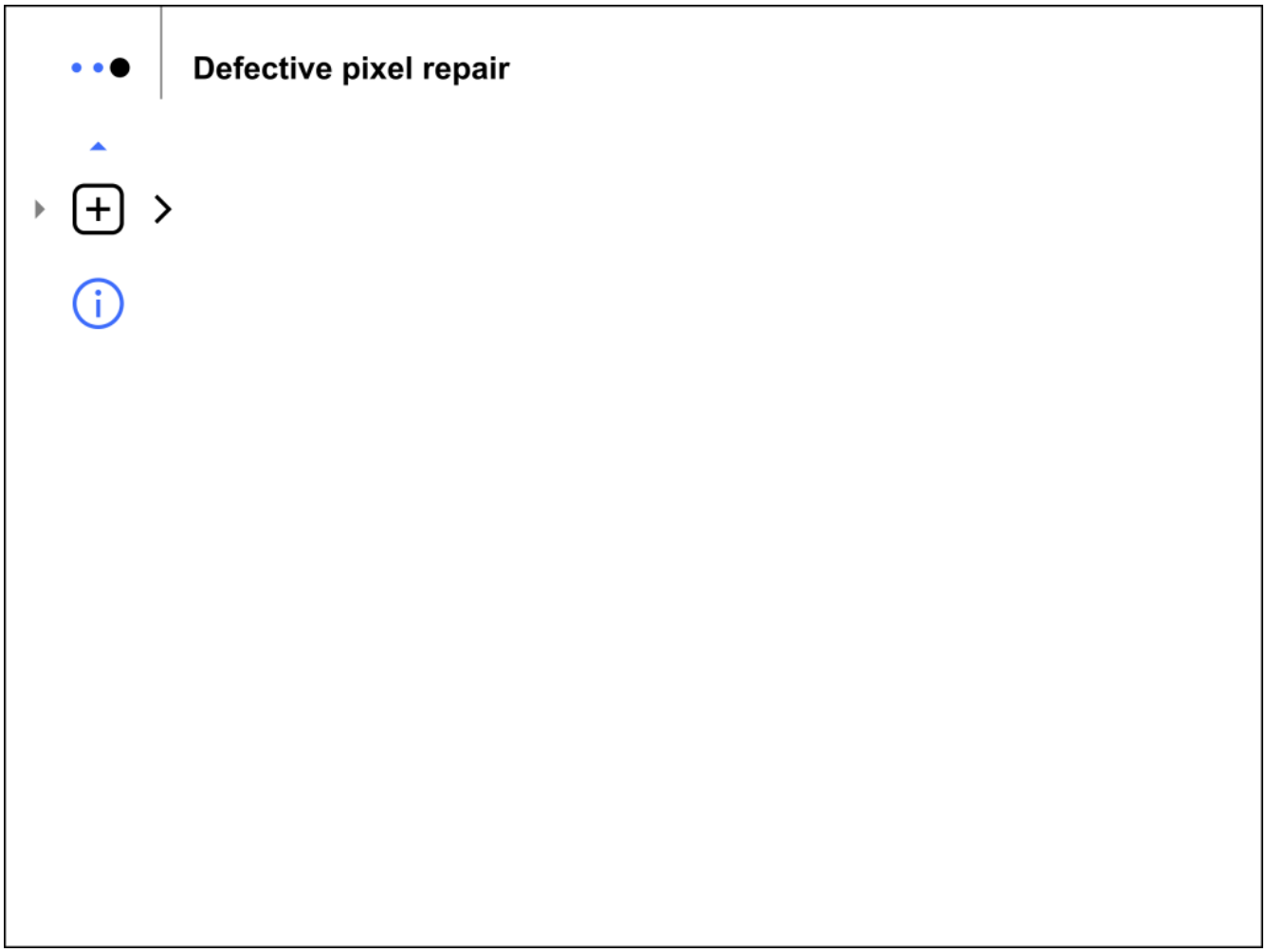

Amplification level

Sensitivity enhancement levels (Normal N, High H, Ultra U) are software algorithms that enhance the quality of detection and recognition in various observation conditions. When the temperature contrast decreases (fog, precipitation, high humidity), it is recommended to increase the amplification level.

To reduce digital distortion, activate the **Smoothing Filter** in the main menu.

Normal

High

Ultra

Option 1:

Press the **DOWN (8)** button briefly to switch the amplification level.

Option 2:

1. Press and hold the **MENU (9)** button to enter the main menu.
2. Use the **UP (7)/DOWN (8)** buttons to select the **Amplification Level** icon.
3. Press the **MENU (9)** button briefly to enter the Amplification Level submenu.
4. Use the **UP (7)/DOWN (8)** buttons to select one of three amplifying levels of sensitivity (Normal N, High H, Ultra U).
5. Press the **MENU (9)** button briefly to confirm the selection.

Colour Modes

White hot is the default display mode.

To select another palette:

1. Press and hold down the **MENU (9)** button to enter the main menu.

2. Select the **Color Modes** icon with the **UP (7)/DOWN (8)** buttons.
3. Press briefly the **MENU (9)** button to enter submenu.
4. Select the desired palette with the **UP (7)/DOWN (8)** buttons.
5. Confirm your selection with a brief press of the **MENU (9)** button.

Note: you can also switch from a selected color palette to the **White hot** palette with a long press of the **DOWN (8)**button.

Tip: to preserve brightness and contrast values when switching palettes, activate **User Mode**.

- White hot – a black and white palette where black = cold; white = hot
- Black hot – a black and white palette where white = cold; black = hot
- Green
- Red Hot
- Red Monochrome
- Rainbow
- Ultramarine
- Violet
- Sepia

Attention! The device should not be used to accurately measure temperature. The images generated are based on temperature contrast rather than true temperature readings.

Smoothing Filter

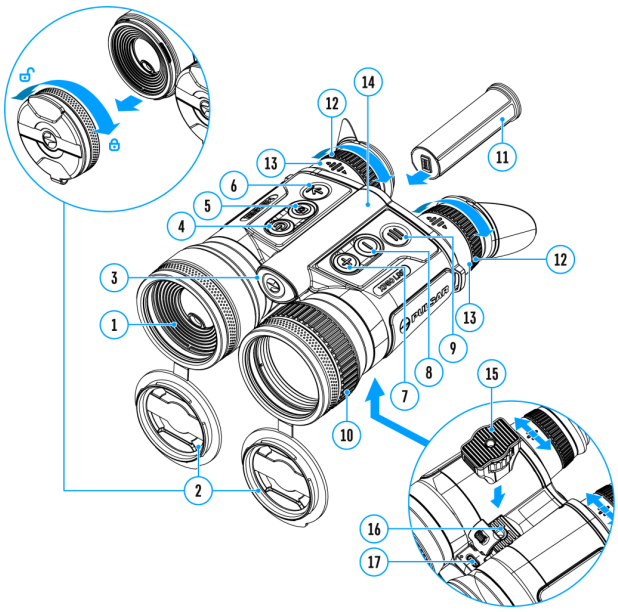

Used to reduce digital distortion while maintaining a high level of sensitivity.

Smoothing Filter Off

Smoothing Filter On

1. Press and hold the **MENU (9)** button to enter the main menu.
2. Use the **UP (7)/DOWN (8)** buttons to select the **Smoothing Filter** icon.
3. Press the **MENU (9)** button briefly to turn the filter on/off.

User Mode

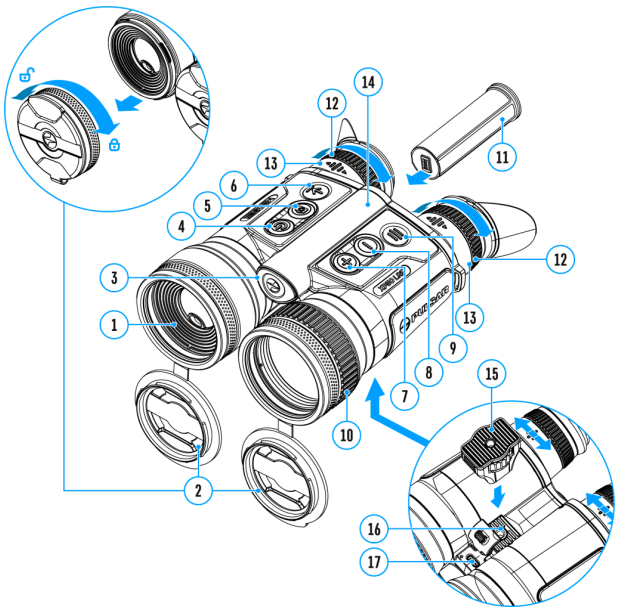

The User Mode function saves selected brightness and contrast settings in the device's memory providing optimal image quality for the next use of the thermal imager immediately, with no additional adjustments needed.

1. Press and hold the **MENU (9)** button to enter the main menu.
2. Use the **UP (7)/DOWN (8)** buttons to select the **User Mode** icon.
3. Press the **MENU (9)** button briefly to turn the mode on/off.

PiP Mode

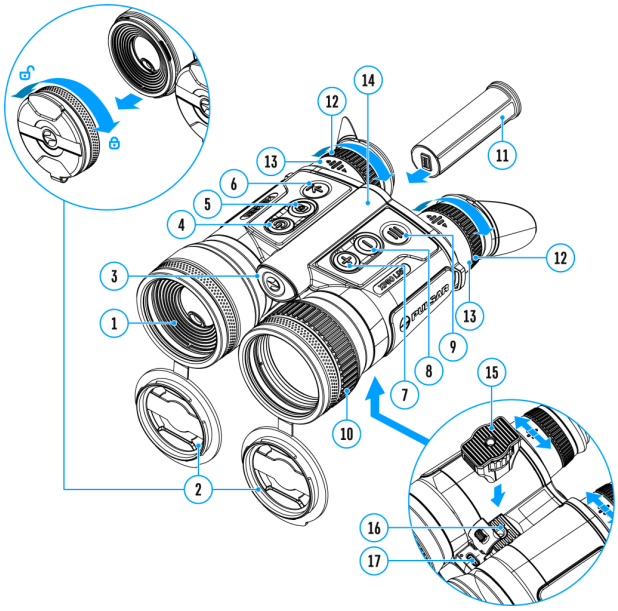

Picture in Picture mode

1. Press and hold the **MENU (9)** button to enter the main menu.
2. Use the **UP (7)/DOWN (8)** buttons to select the **PiP Mode** icon.
3. Press the **MENU (9)** button briefly to turn on/off.

Display Settings

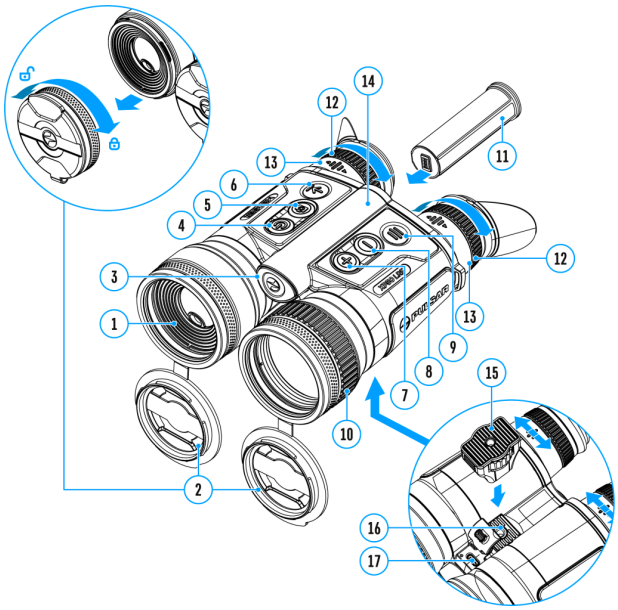

1. Press and hold the **MENU (9)** button to enter the main menu.
2. Use the **UP (7)/DOWN (8)** buttons to select the **Display Settings** menu item.
3. Press the **MENU (9)** button briefly to enter the submenu.

Display dimming

The dimming function is designed to reduce the brightness of the display when using the device in the dark to reduce eye strain.

The Overlay Brightness value in dimming mode will be retained when the function is turned on again.

- Press the **MENU (9)** button to select *On* for turning on the function or *Off* for turning it off.

Overlay Brightness

Adjust brightness level of the icons and screensavers (Pulsar, Display off) on the display.

1. Use the **UP (7)/DOWN (8)** buttons to select the **Overlay Brightness** icon.
2. Press the **MENU (9)** button briefly to enter the submenu.
3. Use the **UP (7)/DOWN (8)** buttons to select the desired brightness level from 0 to 10.
4. Press the **MENU (9)** button briefly to confirm the selection.

Screen shape

1. Use the **UP (7)/DOWN (8)** buttons to select the **Screen shape** .
2. Press the **MENU (9)** button briefly to enter the submenu.

3. Use the **UP (7)/DOWN (8)** buttons to select the desired screen shape: rectangular, rounded or circular.
4. Press the **MENU (9)** button briefly to confirm the selection.

Image Stabilization

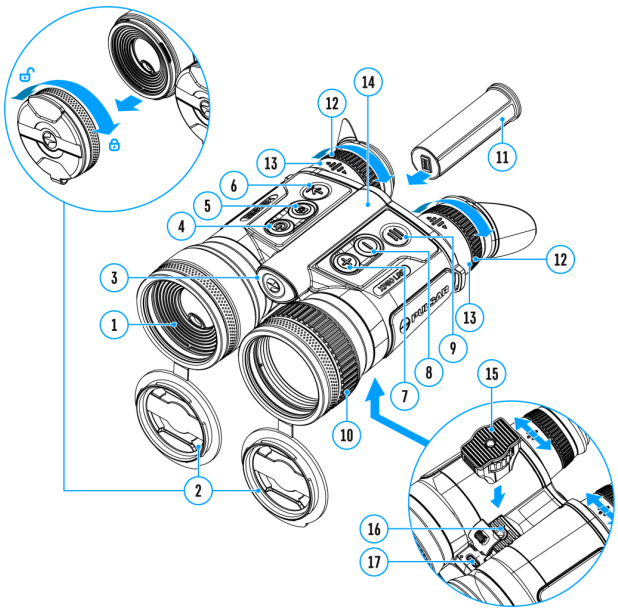

The stabilization function allows you to get a clearer and more stable image in the case of hand tremor when observing for long periods of time or when working at high magnification.

Stabilization Activation

Option 1:

Press and hold the **UP/ZOOM (7)** button to switch on image stabilization.

Option 2

1. Press and hold the **MENU (9)** button to enter the main menu.
2. Use the **UP (7)/DOWN (8)** buttons to select the **Image Stabilization** icon.
3. Press the **MENU (9)** button briefly to enter the submenu.
4. Press the **MENU (9)** button briefly to turn **Stabilization** on/off.

Note: the image stabilization function is automatically switched off during laser rangefinder operation.

Stabilization Calibration

If the image quality decreases during long-term use of stabilization, it is recommended to perform calibration.

1. Press and hold the **MENU (9)** button to enter the main menu.
2. Use the **UP (7)/DOWN (8)** buttons to select the **Image Stabilization** icon.
3. Press the **MENU (9)** button briefly to enter the submenu.
4. Use the **UP (7)/DOWN (8)** buttons to select the **Stabilization Calibration** menu item
5. Press the **MENU (9)** button briefly to enter the function menu.
6. Put device on a stable surface to avoid any movement and press “Calibrate”. The process will take about 10 seconds.

Bluetooth

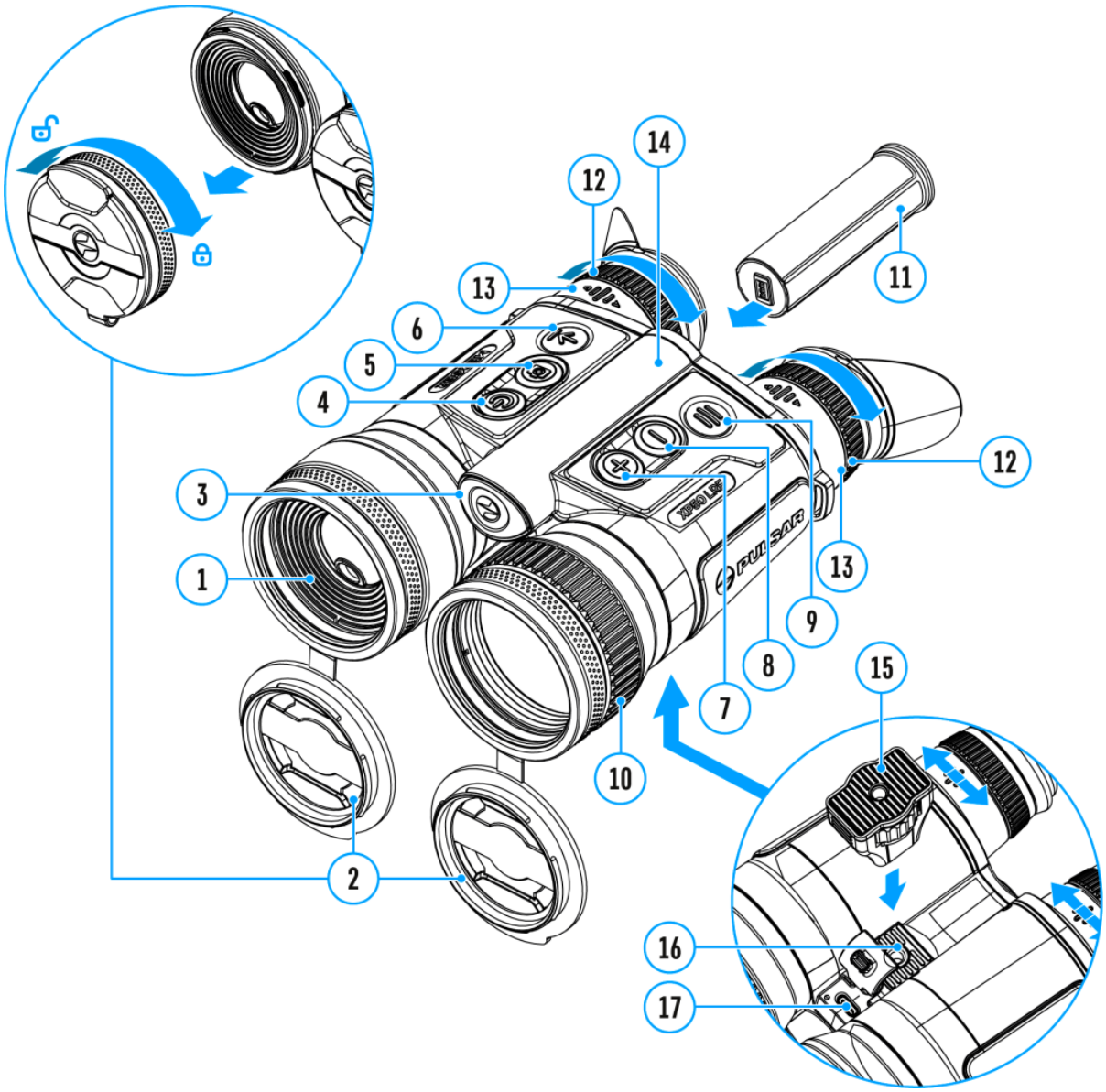

Bluetooth Activation

Turn on/off Bluetooth

1. Press and hold the **MENU (9)** button to enter the main menu.

2. Use the **UP (7)/DOWN (8)** buttons to select the **Bluetooth** menu item.

3. A short press of the **MENU (9)** button opens the submenu.

4. Turn Bluetooth on/off with a short press of the **MENU (9)** button.

5. Press and hold down the **MENU (9)** button to exit the submenu.

Bluetooth Pairing with Stream Vision Ballistics App

1. Turn on the Bluetooth module.

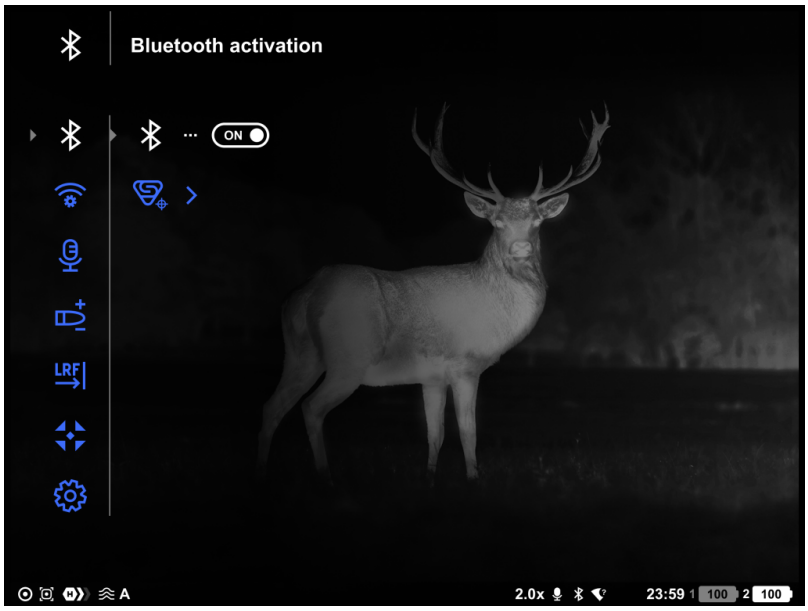

2. In the **Bluetooth** section of the menu, use the **UP (7)/DOWN (8)** buttons to select the **Bluetooth pairing** menu item.

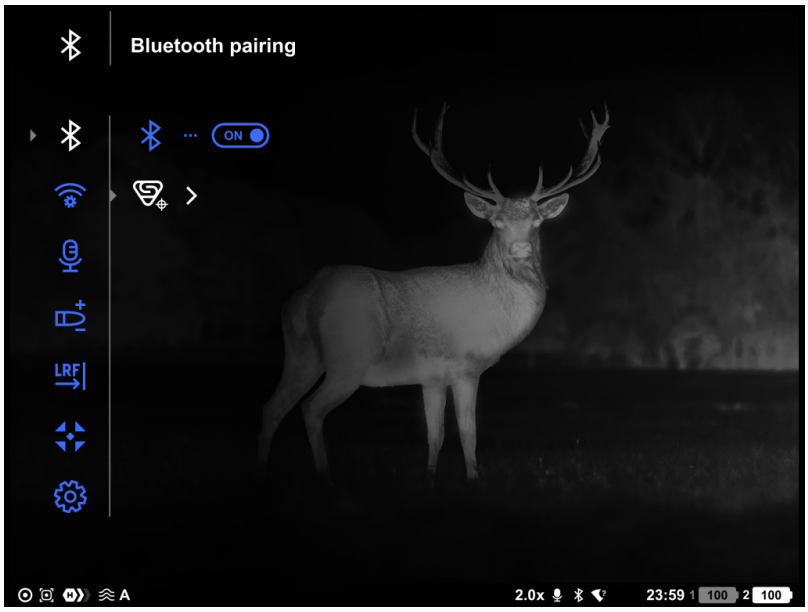

3. Confirm your selection with a short press of the **MENU (9)** button.

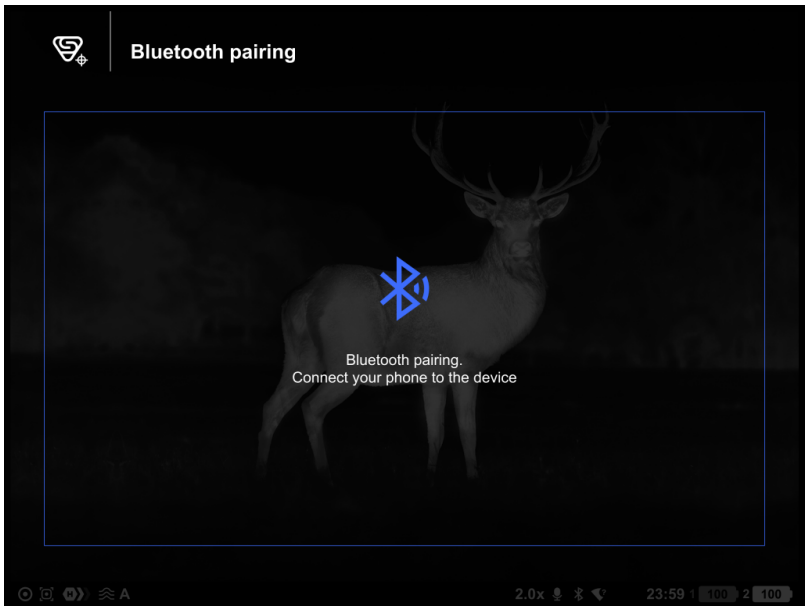

4. Turn on Bluetooth on your smartphone.

5. Connect your smartphone to the device using the **Stream Vision Ballistics** App (Devices tab → Connect Device button).

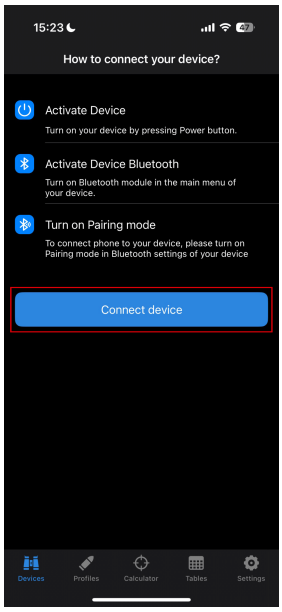

6. Click “Connect” next to your device.

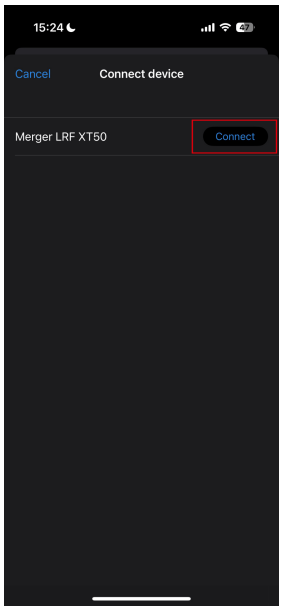

7. Enter the code from the device screen in the Stream Vision Ballistics App and tap "Connect".

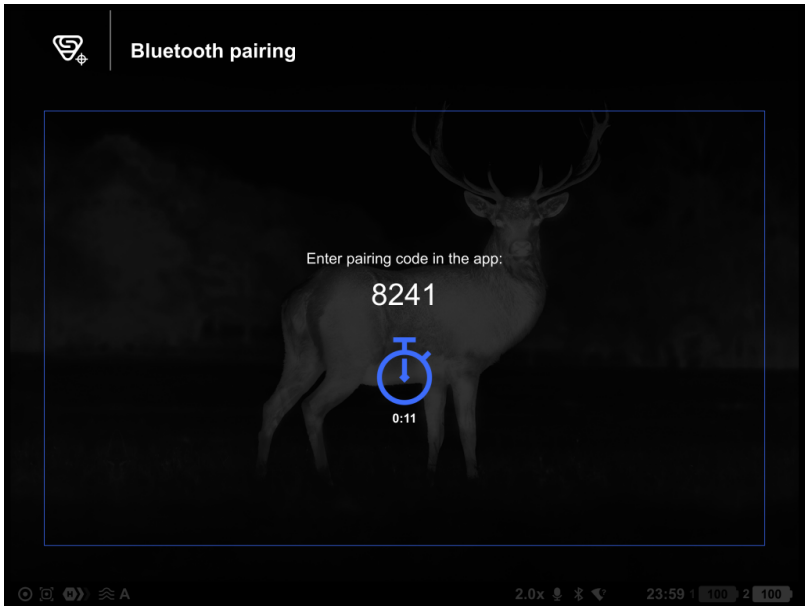

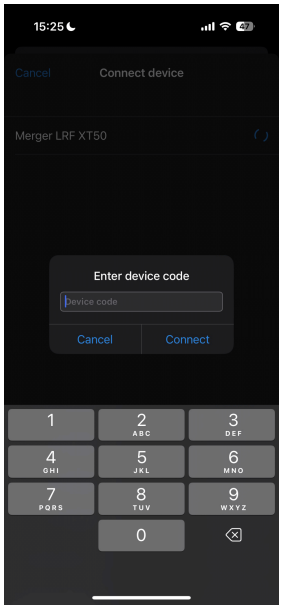

8. The blue Bluetooth icon next to the device means that the device is connected.

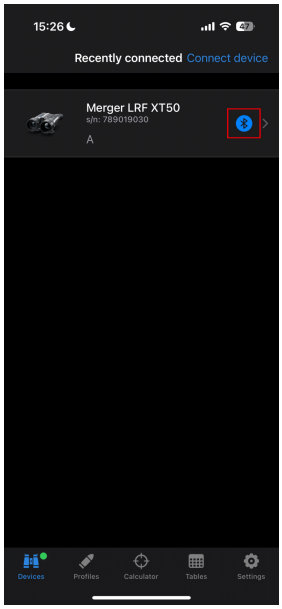

Wi-Fi Settings

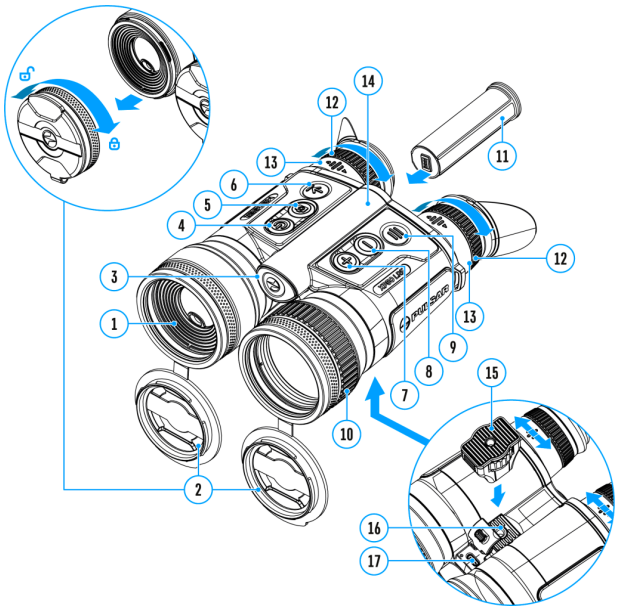

This menu option allows you to set up your device for operation in a Wi-Fi network.

1. Press and hold down the **MENU (9)** button to enter the main menu.
2. Select the **Wi-Fi Settings** menu option with the **UP (7)/DOWN (8)** buttons.

3. Press briefly the **MENU (9)** button to enter submenu.
4. Select the desired menu item with the **UP (7)/DOWN (8)** buttons.

Wi-Fi Activation

Turning Wi-Fi on/off

1. Use the **UP (7)/DOWN (8)** buttons to select the **Wi-Fi Activation** icon.
2. Press the **MENU (9)** button briefly to turn Wi-Fi on/off.

Password Setup

This menu option allows you to set a password to access your binoculars from an external device.

The password is used to connect an external device (i.e. smartphone) to your thermal imager.

1. Press briefly the **MENU (9)** button to enter the **Password Setup** PAS submenu.
2. The unique password only for your device will appear on the image.
3. Use the **UP (7)/DOWN (8)** buttons to set the desired password using the **UP** button to increase and the **DOWN** button to decrease the values.
4. Switch between digits with a short press of the **MENU (9)** button.
5. Save the password and exit the submenu with a long press of the **MENU (9)** button.

Access Level Setup

This menu option allows you to set required access level of the Stream Vision 2 application to your device.

- Access level **Owner.** The Stream Vision 2 user has the complete access to all device's functions.
- Access level **Guest**. The Stream Vision 2 user has the access only to the real time video stream from the device.

1. Press briefly the **MENU (9)** button to enter the **Access Level Setup** submenu.
2. Select the access level with the **UP (7)/DOWN (8)** buttons.
3. Press and hold the **MENU (9)** to confirm your selection and exit from the submenu.

Wi-Fi Band

This setting helps to solve smartphone connection issues in the following cases:

- If your smartphone does not support 5 GHz Wi-Fi band, switch to 2.4 GHz.
- Many Wi-Fi networks cause interference. In this case, switching between Wi-Fi bands can improve the connection between the device and the smartphone.

1. Press briefly the **MENU (9)** button to enter the **Wi-Fi Band** submenu.
2. Press the **UP (7)/DOWN (8)** buttons to select the WiFi bandwidth – **5 GHz** or **2.4 GHz**.
3. Confirm your selection with a short press of the controller **MENU (9)** button.

Microphone

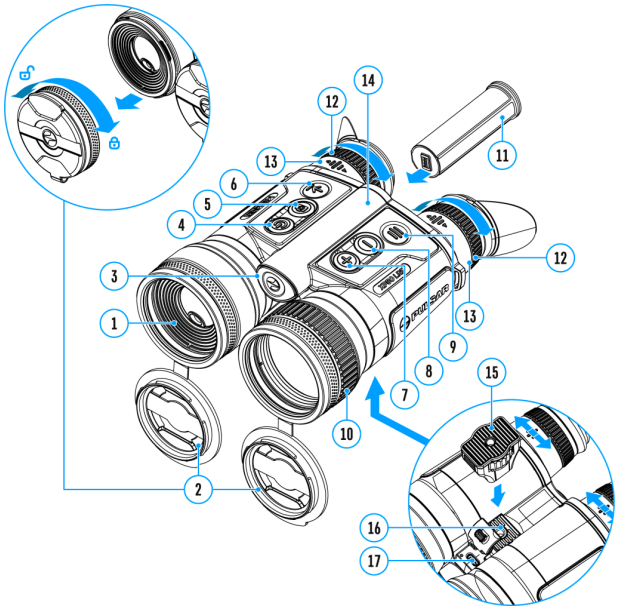

Turning on/off Microphone

This item allows you to enable (or disable) the microphone for recording sound during video recording.

1. Press and hold the **MENU (9)** to enter the main menu.
2. Select the **Microphone** menu item with the **UP (7)/DOWN (8)** buttons.
3. To turn on the microphone, briefly press the **MENU (9)** button. ON
4. To turn off the microphone, briefly press the **MENU (9)** button. OFF

Ballistics

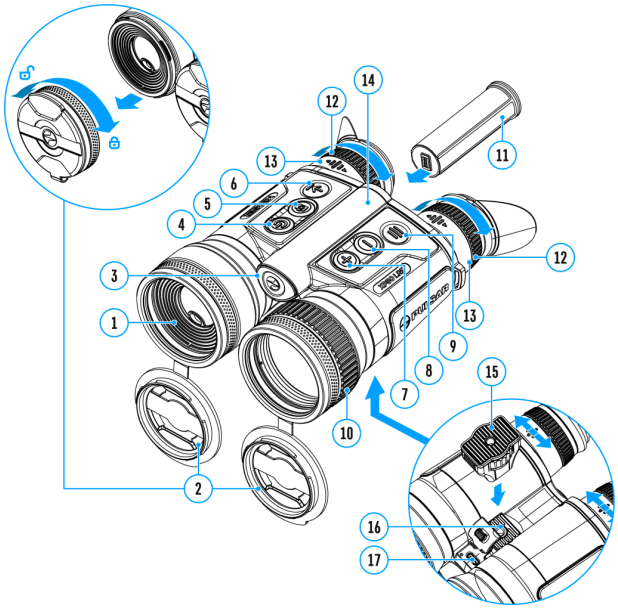

This section contains parameters for the ballistic calculator in the device.

1. Enter the main menu with a long press of the **MENU (9)** button.
2. Use the **UP (7)/DOWN (8)** buttons to select the submenu **Ballistics** .
3. Enter the submenu with a short press of the **MENU (9)** button.
4. Use the **UP (7)/DOWN (8)** buttons to select the desired menu item.

Ballistics Activation

The Ballistic calculator function shows the recommended aiming point and correction values. For more information on using the function, see the section **Ballistic Calculator.**

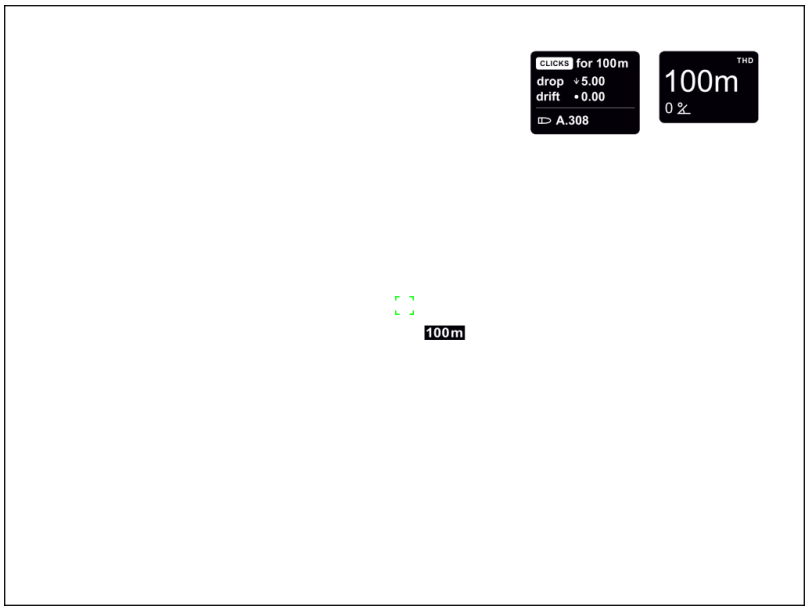

1. Use the **UP (7)/DOWN (8)** buttons to select **Ballistics Activation** .
2. Turn the Ballistic Calculator on/off with a short press of the **MENU (9)** button.

Profile

This item allows you to select one of five profiles (A, B, C, D, E) to use in the ballistics calculator.

1. Use the **UP (7)/DOWN (8)** buttons to select **Profile** .
2. Enter the submenu with a short press of the **MENU (9)**.
3. Use the **UP (7)/DOWN (8)** buttons to select one of the profiles (marked with the letters A, B, C, D, E).
4. Confirm your selection with a short press of the **MENU (9)**.

Ballistic Calculator Units

In this item, you can change or disable the units for the ballistic calculator corrections.

1. Use the **UP (7)/DOWN (8)** buttons to select the **Ballistic Calculator Units** menu item.
2. Briefly press the **MENU (9)** button to enter the submenu.
3. Use the **UP (7)/DOWN (8)** buttons to select one of the three units (MOA, MRAD, Click) or Off to disable the units.
4. Confirm your selection with a brief press of the **MENU (9)** button.

Rangefinder

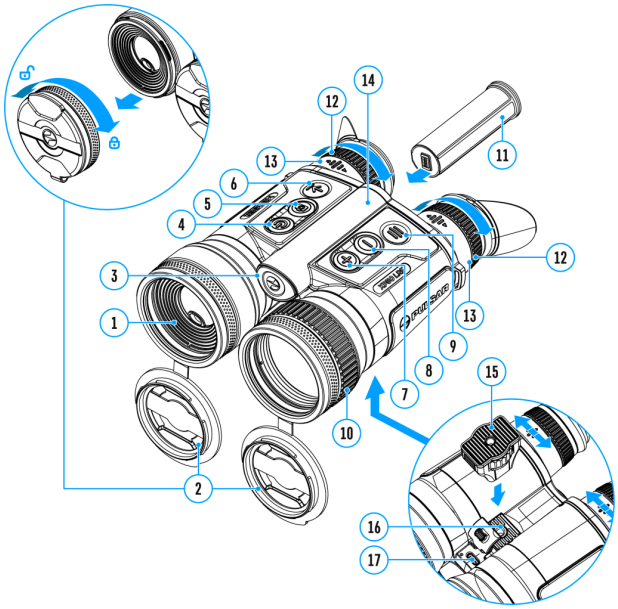

Menu item **Rangefinder** allows you to set up built-in rangefinder's parameters as follows:

1. Enter the main menu with a long press of the **MENU (9)** button.
2. Select the submenu **Rangefinder** LRF with the **UP (7)/DOWN (8)** buttons.
3. Enter the submenu with a short press of the **MENU (9)** button.
4. Select the desired menu item with the **UP (7)/DOWN (8)** buttons.

Reticle Type

1. Select the **Reticle Type** menu item with the **UP (7)/DOWN (8)** buttons.
2. Press briefly the **MENU (9)** button to enter submenu.
3. Select one of the three reticle shapes with the **UP (7)/DOWN (8)** buttons.
4. Confirm selection with a brief press of the **MENU (9)** button.
5. The selected mark appears on the image.
6. If the rangefinder is not used for more than four seconds after measurement, the rangefinder mark disappears from the image.

TPA

Function “TPA” (Target Position Angle) allows you to measure the angle of target location (angle of elevation). When the function is activated, the angle is shown continuously.

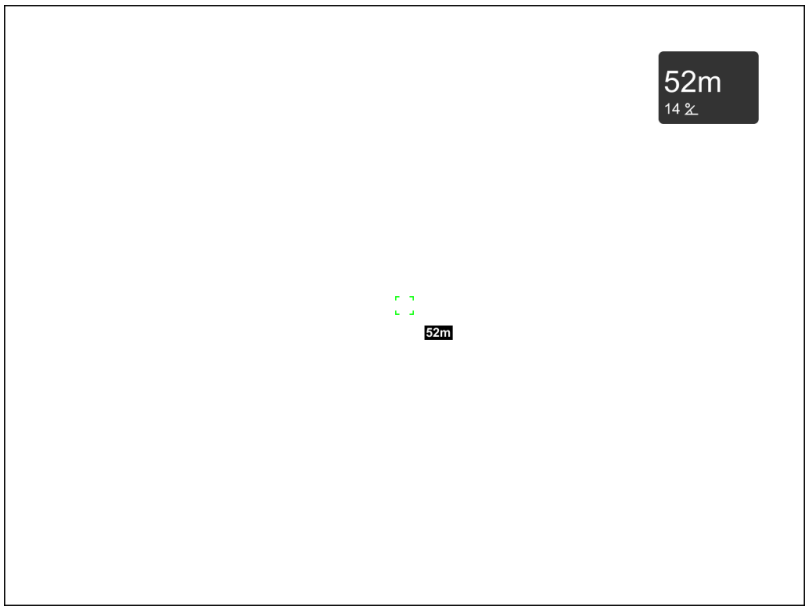

1. Select **TPA** with the **UP (7)/DOWN (8)** buttons.
2. Turn **TPA** on/off with a short press of the **MENU (9)** button.

THD

“THD” (True Horizontal Distance) function allows you to measure true horizontal distance to a target based on the angle of elevation value.

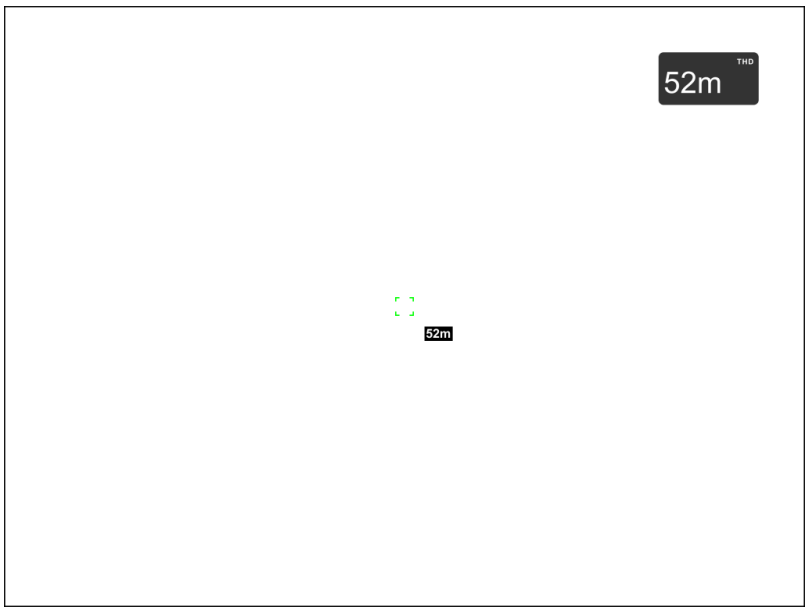

1. Select **THD** with the **UP (7)/DOWN (8)** buttons.
2. Turn **THD** on/off with a short press of the **MENU (9)** button
3. Hereinafter the message **THD** will appear above the distance readings.

Auxiliary Indication of Distance

The “Auxiliary indication of distance” function shows an additional window with the result of measuring the distance near the reticles of the rangefinder.

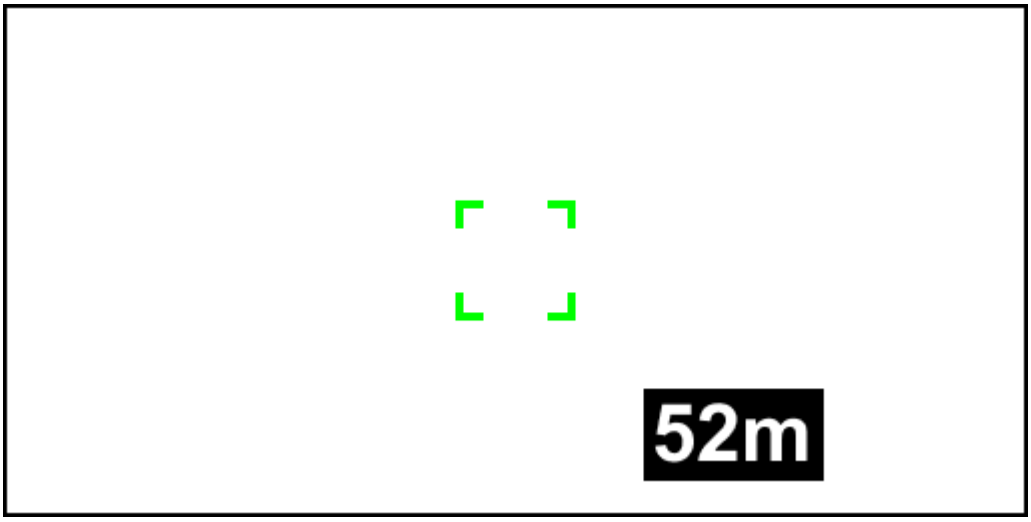

1. Select **Auxiliary indication of distance** with the **UP (7)/DOWN (8)** buttons.
2. Turn on/off the function with a short press of the **MENU (9)** button.

Calibration Mode

Calibration mode selection.

Calibration enables the device to equalize the microbolometer background temperature and eliminate the image flaws (such as vertical bars, phantom images, etc.).

There are three calibration modes: **Manual, Semi-Automatic** and **Automatic**.

The selected calibration mode is displayed in the status bar (see **Status Bar** section).

Select the required mode in the Calibration Mode menu item:

1. Press and hold the **MENU (9)** button to enter the main menu.

2. Use the **UP (7)/DOWN (8)** buttons to select the **Calibration Mode** icon.
3. Press the **MENU (9)** button briefly to enter the submenu.
4. Use the **UP (7)/DOWN (8)** buttons to select one of the calibration modes described below.
5. Press the **MENU (9)** button briefly to confirm the selection.

M mode (Manual)

- Close the lens cover **(2)**.
- Press the **ON/OFF (4)** button briefly.
- Open the lens cover **(2)** after the calibration is completed.

SA mode (Semi-Automatic)

- The user independently determines the need for calibration (according to the image being observed).
- Press the **ON/OFF (4)** button briefly to activate calibration.
- There is no need to close the lens cover because an internal shutter covers the microbolometer automatically.

A mode (Automatic)

- The device is calibrated autonomously according to firmware algorithms.
- There is no need to close the lens cover because an internal shutter covers the microbolometer automatically.
- In this mode, the user can still choose to calibrate the device using the **ON/OFF (4)** button if required (as in the **SA** mode).
- A countdown timer :05 will appear instead of the calibration icon when in automatic calibration mode with 5 seconds remaining until automatic calibration.

Notes:

- During calibration, the image on the display briefly freezes for up to 1 second.
- The selected calibration mode is saved after restarting the device.

General Settings

1. Press and hold down the **MENU (9)** button to enter the main menu.
2. Select option **General Settings** with the **UP (7)/DOWN (8)** buttons.
3. Press briefly the **MENU (9)** button to confirm.

The following settings are available:

Language

Selecting interface language

1. Select option **Language** with the **UP (7)/DOWN (8)** buttons.
2. Press briefly the **MENU (9)** button to confirm.
3. Select one of the available interface languages with a short press of the **UP (7)/DOWN (8)** buttons: English, German, Spanish, French, Russian, Italian, Portuguese, Dutch, Danish, Norwegian, Swedish, Polish, Czech, Hungarian, Bulgarian, Finnish, Lithuanian, Latvian, Ukrainian.
4. Press briefly the **MENU (9)** button to confirm.

Date

Date setup

1. Select option **Date** with **UP (7)/DOWN (8)** buttons.
2. Press briefly the **MENU (9)** button to confirm. Date format is displayed as: YYYY/MM/DD (year/month/day)
3. Select the correct values for the year, month and date with a short press of the **UP (7)/DOWN (8)** buttons.
4. Switch between digits with a short press of the **MENU (9)** button.
5. Save selected date and exit the submenu with a long press of the **MENU (9)** button.

Time

Time setup

1. Select option **Time** with **UP (7)/DOWN (8)** buttons.
2. Press briefly the **MENU (9)** button to confirm.
3. Select the desired time format with a short press of the **UP (7)/DOWN (8)** buttons: 24 or PM/AM.
4. Switch to hour setup with a brief press of the **MENU (9)** button.
5. Select hour value with a brief press of the **UP (7)/DOWN (8)** buttons.
6. Switch to minute setup with a brief press of the **MENU (9)** button.
7. Select minute value with a brief press of the **UP (7)/DOWN (8)** buttons.
8. Save selected time and exit the submenu with a long press of the **MENU (9)** button.

Units of Measure

Selection of units of measurement

1. Select option **Units of Measure** with **UP (7)/DOWN (8)** buttons.
2. Press briefly the **MENU (9)** button to confirm.
3. Select the desired unit of measurement – meters or yards – with **UP (7)/DOWN (8)** buttons.
4. Press briefly the **MENU (9)** button to confirm.
5. Exit to general settings submenu takes place automatically.

Proximity Sensor

This feature allows you to disable/enable the display to turn off automatically when the device moves away from the user's face.

When the proximity sensor is off, the display can be turned on/off by pressing the **ON/OFF** button **(4).**

By default, the proximity sensor is on.

1. Use the **UP (7)/DOWN (8)** buttons to select **Proximity Sensor** .
2. Press the **MENU (9)** button briefly to turn the sensor on/off.

Video Compression

When set to ON, standard video compression is applied so the video file size is reduced.

When set to OFF, minimal video compression is applied. In this case, the quality of the recorded video is better, but its size is significantly increased.

Warning! Larger video file sizes result in shorter recording times. This may lead to longer download times for video files through the Stream Vision 2 app.

Enable/disable video compression:

1. Select the **Video Compression** menu item with the **UP (7)/DOWN (8)** buttons.
2. To turn on video compression, briefly press the **MENU (9)** button. ON
3. To turn off video compression, briefly press the **MENU (9)** button. OFF

Auto Shutdown Options

When this feature is enabled, the device automatically turns off after 30 minutes of inactivity in Display off mode.

1. Use the **UP (7)/DOWN (8)** buttons to select **Auto Shutdown Options** .
2. Press the **MENU (9)** button to enter the submenu.
3. Press **MENU (9)** button to select *On* for turning on the function **If device inactive for 30 min** or *Off* for turning it off.

Default Settings

Restore default settings

1. Select option **Default Settings** ↩ with **UP (7)/DOWN (8)** buttons.
2. Press briefly the **MENU (9)** button to confirm.
3. With a short press of the **UP (7)/DOWN (8)** buttons select *"Yes"* to restore default settings or *"No"* to abort.
4. Confirm selection with a brief press of the **MENU (9)** button.
    - If *"Yes"* is selected, display will show *"Do you want to restore default settings?"* with *"Yes"* and *"No"* dialogue options. Select *"Yes"* to restore default settings.
    - If *"No"* is selected, action is aborted and you return to the submenu.

The following settings will be restored to their original values before changes made by the user:

- **Video recorder mode** – Video
- **Amplification level** – High
- **Smoothing filter** – Off
- **User mode** – Off
- **Calibration mode** – automatic
- **Language** – English
- **Microphone** – Off
- **Wi-Fi** – Off (unique password)
- **Magnification** – Off (no digital zoom)
- **PiP** – Off
- **Color mode** – White Hot
- **Unit of measurement** – Metric
- **Video compression** – Off
- **Wi-Fi band** – 2.4 GHz
- **Proximity sensor** – On
- **Display dimming** – Off
- **Auto shutdown if device inactive for 30 min** – On
- **Image stabilization** – Off
- **Bluetooth** – Off
- **Ballistic calculator** – On
- **Profile** – A
- **Ballistic calculator units** – MOA

Attention! When restoring the factory defaults the date, time and user pixel map are saved.

Format

This item allows you to format the Flash-card (memory card) of the device (this will delete all files from the memory card).

Formatting should be carried out in case of a memory card error.

Before formatting, make sure you transfer all footage to other media.

1. Select option **Format** with **UP (7)/DOWN (8)** buttons.
2. Press briefly the **MENU (9)** button to confirm.
3. With a short press of the **UP (7)/DOWN (8)** buttons select *"Yes"* to format the memory card or *"No"* to return to the submenu.
4. Confirm selection with a short press of the **MENU (9)** button.
    - If *"Yes"* is selected, display will show *"Do you want to format memory?"* with *"Yes"* and *"No"* dialogue options. Select *"Yes"* to format the memory card.
    - If *"No"* is selected, formatting is aborted and you return to the submenu.

Defective Pixel Repair

Defective Pixel Repair

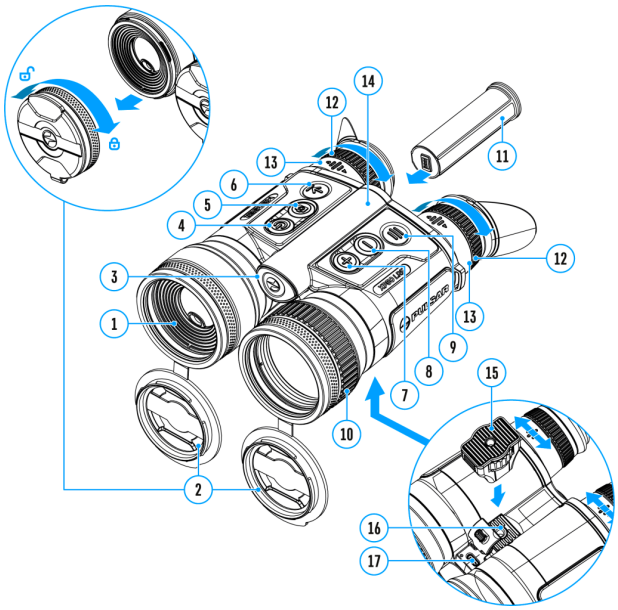

When operating a thermal imager, defective (dead) pixels (bright or dark dots with constant brightness) may become visible on the microbolometer.

Defective pixels on the microbolometer can increase in size relative to the digital-zoom power.

Merger LRF thermal imaging binoculars allow the user to remove any defective pixels on the display, as well as cancel removal, via the device's firmware.

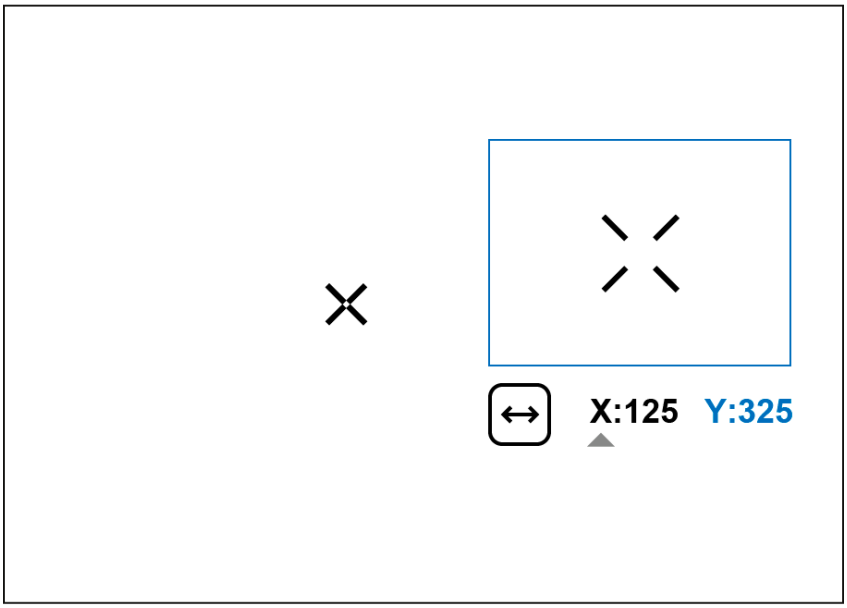

Step 1. Enter the menu to fix the defective pixels

1. Press and hold the **MENU (9)** button to enter the main menu.
2. Use the **UP (7)/DOWN (8)** buttons to select the **Defective Pixel Repair** menu item.

3. Press briefly the **MENU (9)** to open the submenu.
4. Select the **Defective Pixel Repair** option by briefly pressing the **MENU (9)** button.

Step 2. Select the defective pixel

1. A marker will appear in the centre of the image.
2. A "magnifier" will appear on the right side of the image – an enlarged image in a frame with a fixed marker , designed for easier detection of a defective pixel and to match the pixel with the marker, and horizontal and vertical arrows for X and Y axes showing the marker's movement X:125 Y:325.
3. With a short press of the **UP (7)/DOWN (8)** buttons move the marker to align it with a defective pixel.
4. Switch the direction of the marker from horizontal to vertical and vice versa with a short press of the **MENU (9)** button**.**
5. Align the defective pixel with the fixed cross in the frame – the pixel should disappear.

Step 3. Remove the defective pixel

1. Delete the defective pixel with a short press of the **ON/OFF (4).**
2. Once the pixel has been successfully deleted an *"OK"* message will briefly appear on the screen.
3. Then, by moving the marker across the image, you can delete the next defective pixel.
4. Exit the Defective Pixel Repair submenu with a long press of the **MENU (9).**

Warning! On each of the two displays of the thermal imaging device, 1-2 pixels in the form of bright white or coloured (blue, red) dots are allowed. They are not removed and are not a defect.

Restore default pixel map

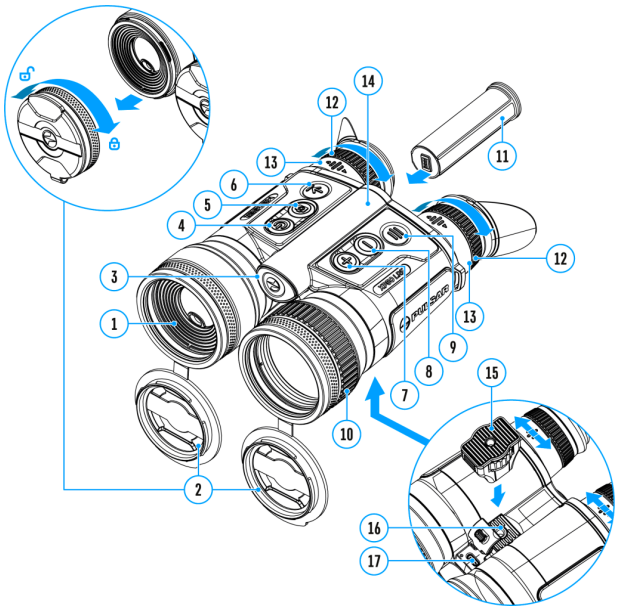

This option allows you to cancel deletion of the defective pixels and return them to the original state.

1. Press and hold down the **MENU (9)** button to enter the main menu.
2. Select the **Defective Pixel Repair** menu item with the **UP (7)/DOWN (8)** buttons.
3. Press briefly the **MENU (9)** button to open the submenu.
4. Select **Restore Default Pixel Map** menu item with the **UP (7)/DOWN (8)** buttons.
5. Press briefly the **MENU (9)** button.
6. Using the **UP (7)/DOWN (8)** buttons, select *"Yes"* if you wish to return to default defective pixel pattern, or *"No"* if you do not.
7. Confirm selection with a short press of the **MENU (9)** button.

Device Information

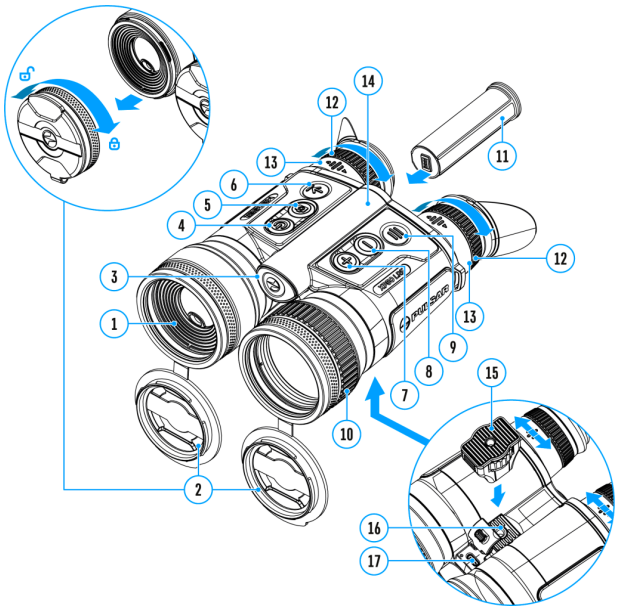

This option allows the user to view the following information about the device:

- Full name
- SKU number
- Serial number
- Firmware version
- Hardware version
- Service information

To display information, do the following:

1. Press and hold down the **MENU (9)** button to enter the main menu.
2. Select option **Device Information** ⓘ with the **UP (7)/DOWN (8)** buttons.
3. Press briefly the **MENU (9)** button to confirm.

Functions

Video Recording And Photography

Merger LRF thermal imaging binoculars feature video recording and photography of the image being ranged to the internal memory card.

Before using the photo and video functions, read the **Date** and **Time** subsections of the General Settings section.

For information on how to watch recorded photos and videos, see the Stream Vision 2 user manual: Android, iOS.

Built-in recorder operates in two modes:

- **Photo** (photography; the icon is displayed in the upper left corner of the image).
- **Video** (video recording; the icon is displayed in the upper left corner of the image, the total remaining recording time is given taking into account the current resolution in the HH:MM format (hours:minutes).

Switching between the operating modes of the video recorder is done by long pressing the **REC (5)** button. Switching between the modes is cyclical (**Video**⟶**Photo**–> **Video**...).

Photo mode. Capturing an image

1. Switch to the **Photo** mode with a long press of the **REC (5)** button.

2. Press the **REC (5)** button briefly to capture a photo. The icon flashes – the photo file is being saved to the built-in SD card.

Video mode. Recording a video

1. Switch to the **Video** mode with a long press of the **REC (5)** button.

2. Press the **REC (5)** button briefly to start video recording.

3. When the video recording starts, the icon will disappear, instead of it an icon with a timer in the MM:SS (minutes:seconds) format will appear **0:03**.

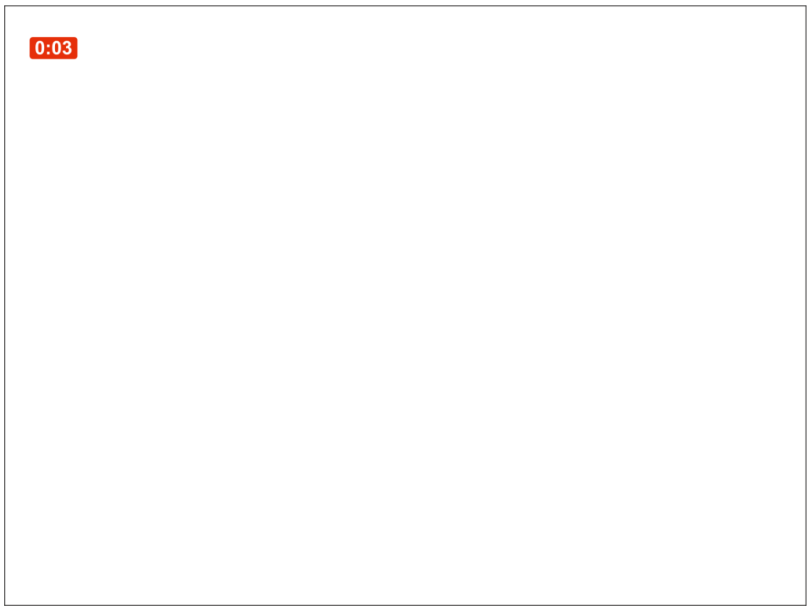

4. Pause/continue recording by briefly pressing the **REC (5)** button.

5. Press and hold the **REC (5)** button to stop video recording.

Video files are stored in the built-in memory card:

- After turning off the video recording;
- Upon powering the device off if recording was on;
- When the memory card is overfilled during recording (Memory Full message appears).

Notes:

- You can enter and navigate the menu during video recording.
- Recorded videos and photos are saved to the built-in memory card of the device in the format img_xxx. jpg (for photos); video_xxx. mp4 (for video).
- Videos are recorded in clips with a maximum duration of 5 minutes. The number of recorded files is limited by the capacity of unit's internal memory and video compression ratio.
- Regularly check free memory within the built-in memory card and move the footage to other storage media to free up the memory card space.
- In case of a memory card error, you can use the format function in the General Settings section of the main menu.
- When the **Display Off** function is activated, video recording continues to run in the background.

Laser Rangefinder

The binoculars are equipped with a built-in rangefinder **(1)**, allowing you to measure distance to objects up to 1500 m away.

Single Measurement Mode

1. Turn on the device, set up image according to section Powering on and Image Setting.

2. Briefly press the **LRF (6)** button to measure the distance. The rangefinder reticle will appear in the centre of the image. In the top right corner of the display you will see distance in meters (or yards – depending on settings).

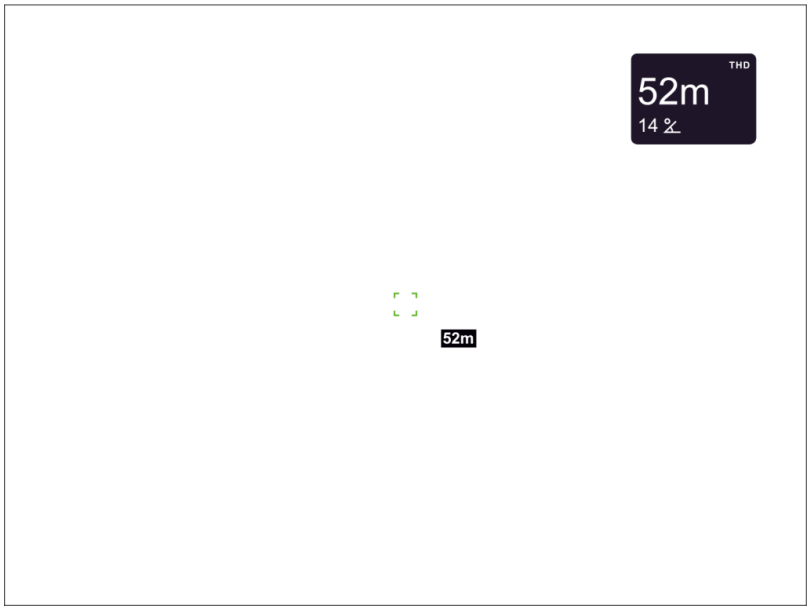

3. If PiP mode is activated, the PiP window remains active upon activation of the rangefinder.

4. Point the rangefinding reticle at an object and press the **LRF (6)** button.

Note: if the rangefinder is idle longer than for 4 seconds, it turns off automatically.

Scan Mode

1. To measure distance in scanning mode, hold down the **LRF (6)** button for longer than two seconds. Measurement readings will be changing in real time as you point the binoculars at different objects. A **SCAN** message will appear in the rangefinder widget and the text become green.

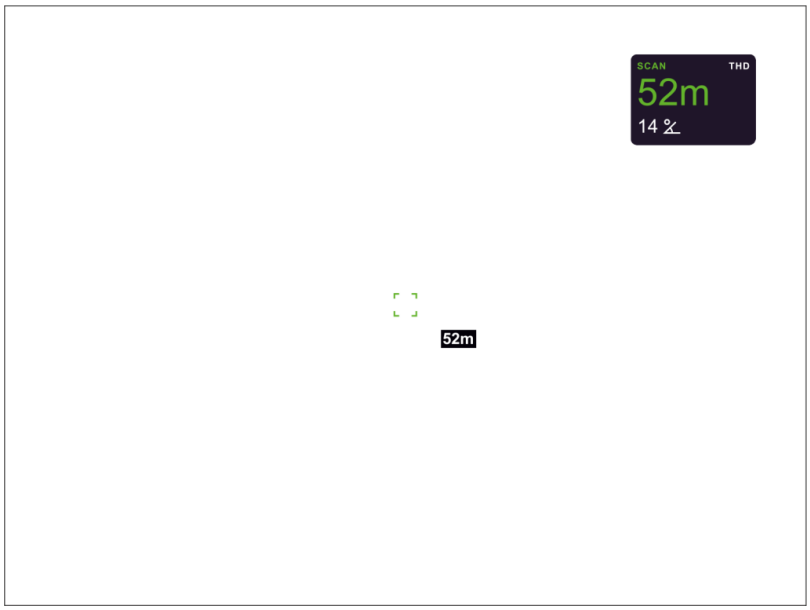

2. To exit **SCAN** mode, press **LRF (6)** button again.

3. If measurement fails, dashes will appear on the display.

4. In 4 seconds of inactivity (no measurement is taken) the rangefinder turns off, the rangefinding reticle with readings disappears from the display.

Notes:

- To select a rangefinding reticle, please see the **Reticle Type** subsection in the **Rangefinder** section.
- To select a unit of measurement (meters or yards) go to the **Units of Measure** subsection of the General Settings section.

Additional Information:

- Accuracy of measurement and maximum range depend on the reflection ratio of the target surface, the angle at which the emitting beam falls on the target surface and environmental conditions. Reflectivity is also affected by surface texture, color, size and shape of the target. A shiny or brightly colored surface is normally more reflective than a dark surface.
- Measuring range to a small sized target is more difficult than to a large sized target.
- Accuracy of measurement can also be affected by light conditions, fog, haze, rain, snow etc. Ranging performance can degrade in bright conditions or when ranging towards the sun.

Ballistics calculator

1. Install the Stream Vision Ballistics app from **Google Play** or **AppStore**.

2. Go to Profiles tab.

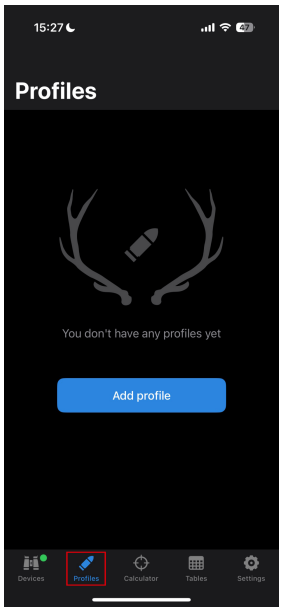

3. Create a profile for your riflescope, ammunition and zeroing distance. Make sure that “Ballistic parameters” switch is on. If your ammo is not on the list, you can enter its parameters manually. The more parameters you specify, the more accurate the recommended point of aiming will be.

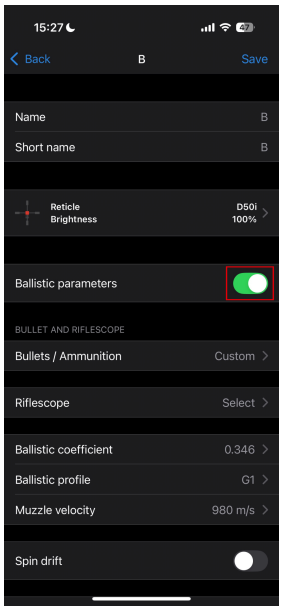

If you select a riflescope model, you will be able to display the correction values in clicks.

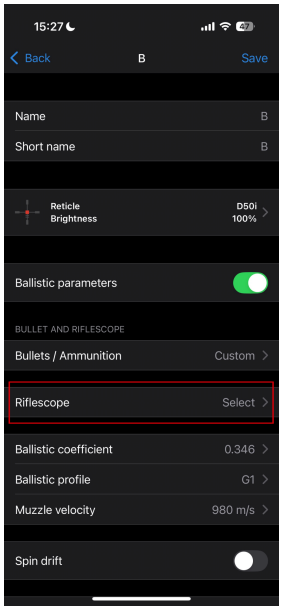

4. Adjust the temperature, pressure and humidity of the environment while zeroing your riflescope.

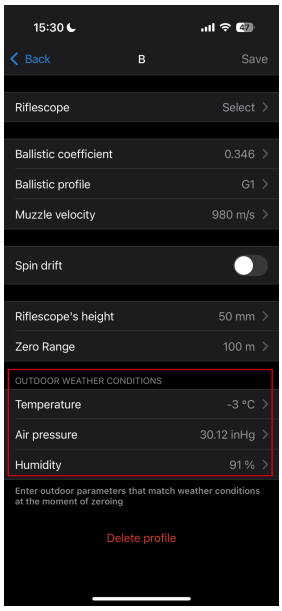

5. Enter a profile name and click save.

6. Connect your device to your smartphone using Bluetooth. First, make sure that your device has the latest firmware version 3.0 or higher installed.

7. Load the profile into the device.

To do this, go to the “Devices” tab ⟶ Select your device ⟶ “All device profiles” → click on the profile you want to replace and select the created profile from the list.

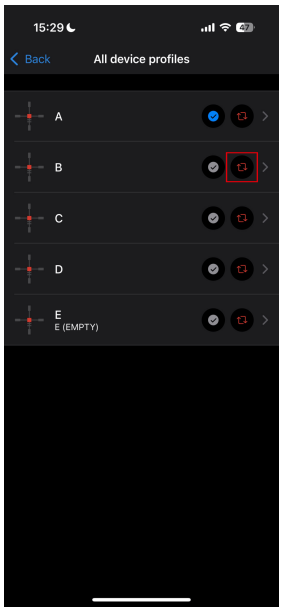

8. Set the status to “Active” for the ballistic profile. To do this, click on the button next to the desired profile, or select it in the profile selection menu in the device.

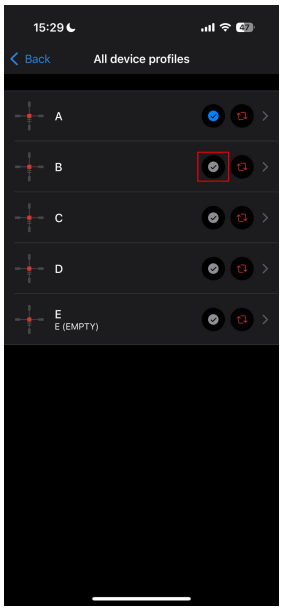

9. Make sure that the **Ballistics** option is enabled in the device's **Ballistics** menu.

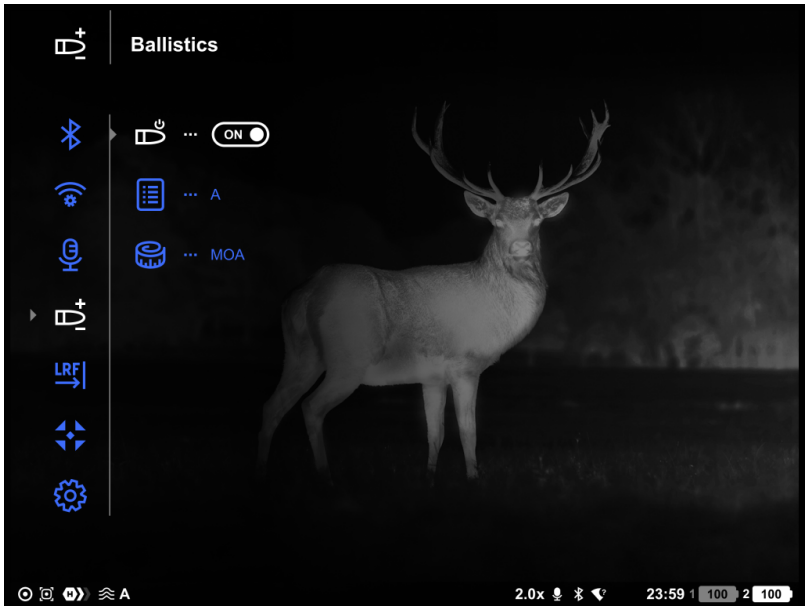

10. Check the accuracy of your profile settings with a test shot at the shooting range.

Note: profiles for different types of ammunition must be zeroed separately.

11. To activate the use of weather data in your geolocation during the shot, go to the "Devices" tab → Select your device → "Outdoor".

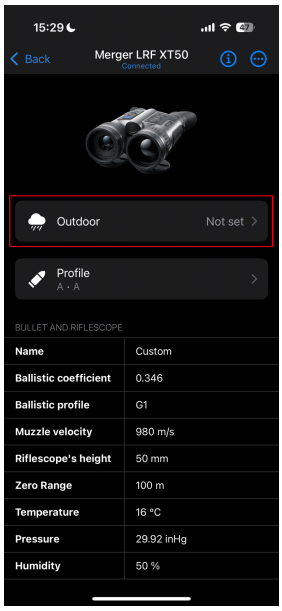

In the **Ballistics** section of the main menu, you can configure the following settings of the ballistic calculator:

- Turn on/off the ballistic calculator
- Select a ballistic profile
- Choose correction units

12. Now when you measure distance with the rangefinder, a ballistic calculator widget will appear on the display with correction values in the selected units.

This function is most useful when used with optical scopes. You can set the corrections by rotating the (windage/elevation) turrets for aiming.

Also, if your riflescope uses a Mil Dot reticle, you can shift it during aiming by the values of these corrections.

Pulsar riflescopes (Thermion 2 Pro/Duo/XG, Thermion 2 LRF, Talion, Digex C50) already have a built-in manual ballistic calculator. Therefore, there will be enough to measure the distance with Merger LRF and set it in the quick menu of the riflescope for the ballistic profile, having previously loaded it into the riflescope via SV Ballistics application.

Stream Vision Ballistics Manual

Android

iOS

Discrete Digital Zoom

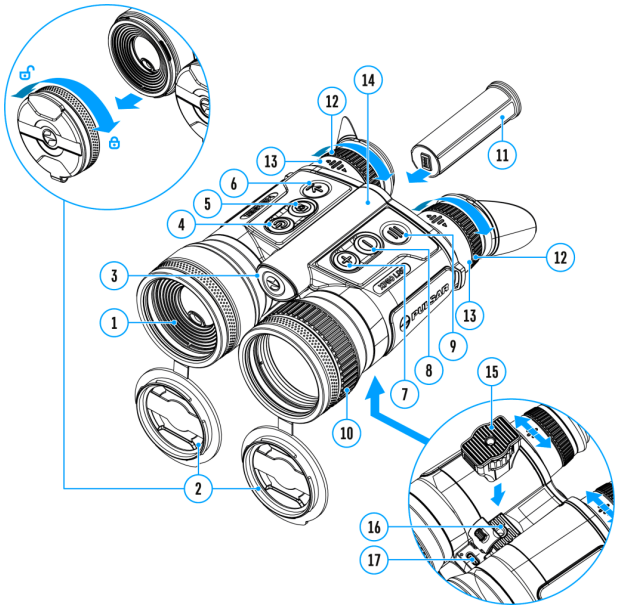

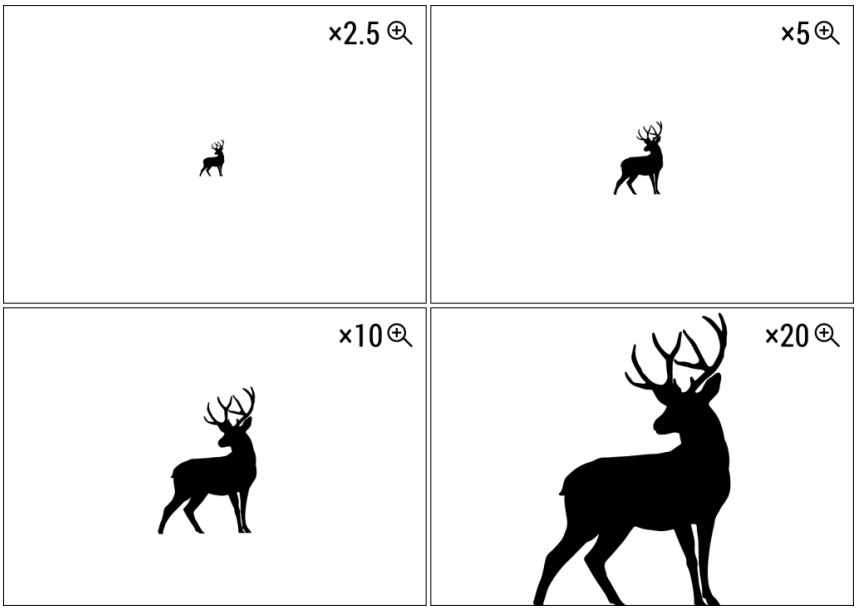

The device allows you to quickly increase the basic magnification (please refer to the **Magnification** line in the **Specifications** table) by 2, 4 or 8 times.

- To operate the discrete digital zoom, press successively the **UP/ZOOM (7)** button.
- The digital zoom will not be saved after the device is re-started.

Note: the magnification value is reset to the base value when the device is switched off

PIP Function

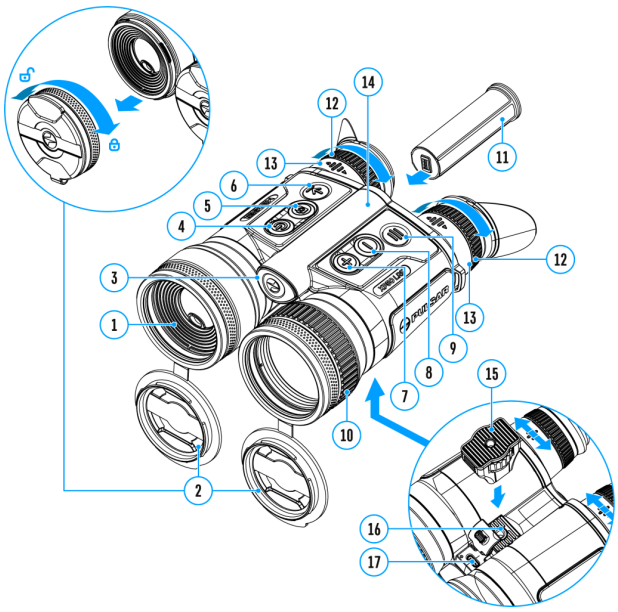

PiP (“Picture in Picture”) allows you to see a zoomed image simultaneously with the main image in a dedicated window.

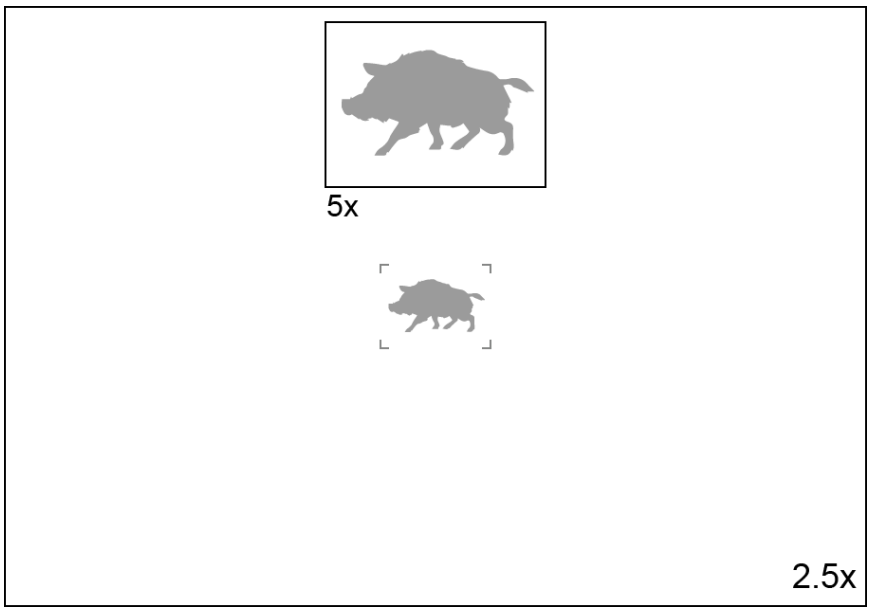

- To turn on and off the **PiP** function see the PiP Mode section.
- Change zoom ratio in the PiP window with a short press of **UP/ZOOM (7)** button.
- The zoomed image is displayed in a dedicated window, while the image in the rest of the screen is displayed at base magnification.
- When PiP is turned on, you can operate the discrete and continuous digital zoom. The magnification will take place only in the dedicated window.
- When PiP is turned off, the image is shown with the optical magnification set for the PiP function.

Display-Off Function

This function darkens the screen, which aids the user’s concealment. However, the device stays on.

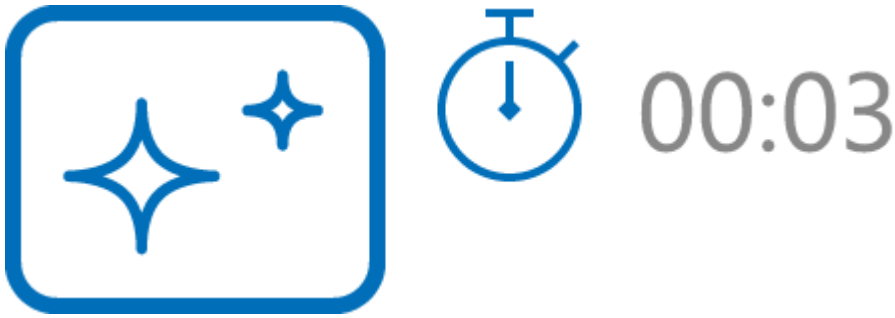

The displays can be turned off automatically if the **proximity sensor** is turned on or by pressing the **ON/OFF (4)** button if the proximity sensor is turned off.

The proximity sensor is turned on:

1. When the device moves away from the user's face, the displays will turn off.
2. When the device approaches the user's face, the displays will turn on again.
3. While holding the **ON/OFF (4)** button, a countdown icon 00:03 will appear on the displays and the device will turn off.

The proximity sensor is turned off:

1. When the device is on, press and hold the **ON/OFF (4)** button. The displays will turn off, the current time and the **"Display off"** icon will appear.
2. Turn the displays back on with a short press of the **ON/OFF (4)** button.
3. When you press and hold the **ON/OFF (4)** button, the displays show the **"Display off"** icon with a countdown. Pressing & holding the button down for the duration of the countdown will power the device off completely.

Wi-Fi Function

The device has a function enabling wireless communication with external devices (smartphone or tablet) via Wi-Fi.

- Turn on the wireless module in the **WI-Fi Activation** menu option.

Wi-Fi operation is shown in the status bar as follows:

Status bar indication	Connection status
	Wi-Fi is off
	Wi-Fi activated by the user, Wi-Fi in the device is being activated
	Wi-Fi is on, no connection with device
	Wi-Fi is on, device connected

- Your device is detected by an external device as “MERGER_XXXX”, where XXXX – is the last four digits of device’s serial number.
- After entering the password on a mobile device (see **Password Setup** subsection of the **Wi-Fi Settings** section for more information on setting a password) and connection is established, the icon in the status bar will change to .
- The Wi-Fi function will turn off automatically if there is not enough battery power for Wi-Fi.
- When Wi-Fi is on, the power supply will switch to the internal battery after the external battery reaches a 20% charge level.

Installing the Device on a Tripod

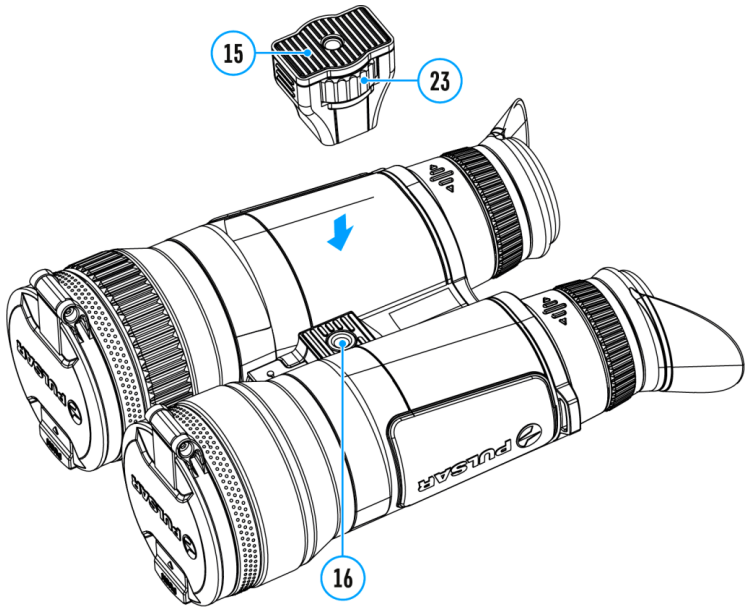

1. Attach the tripod adaptor **(15)** to the socket **(16)**.
2. Screw the adapter wheel **(23)** clockwise until it stops.
3. Secure the adaptor with the device on a tripod.

USB Connection

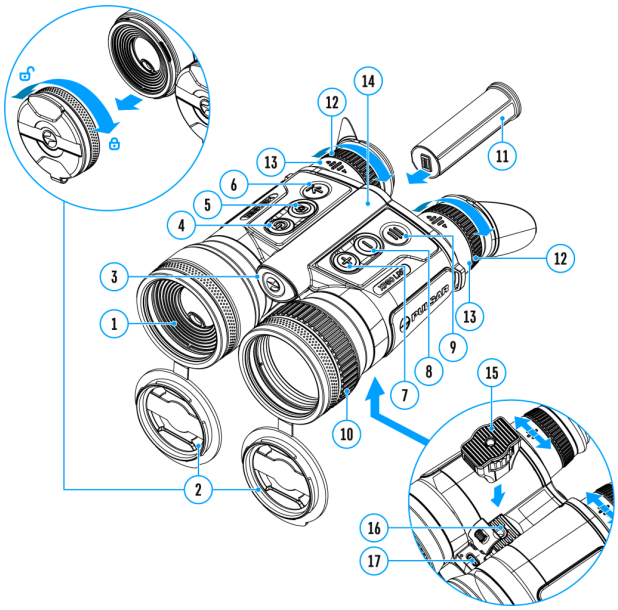

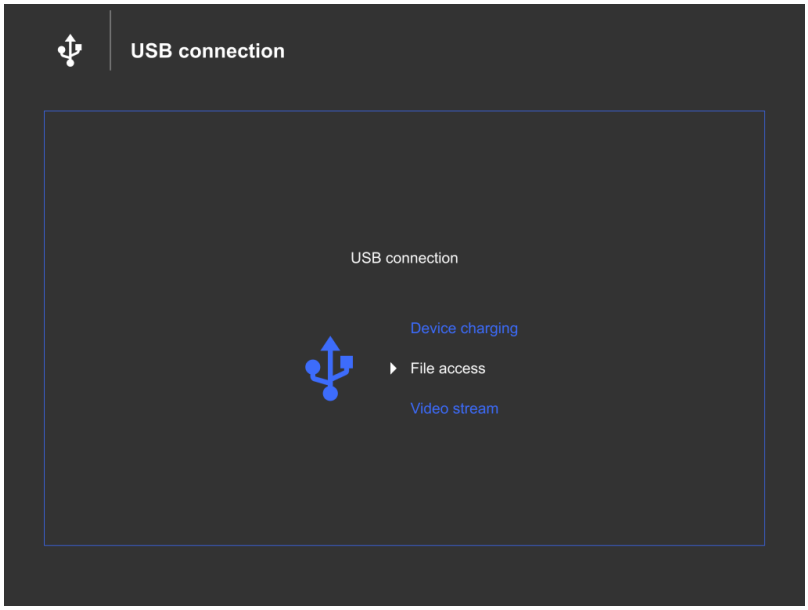

1. Connect one end of the USB cable to the USB Type-C **(17)** connector of the device, the other one to the port on your computer using a USB Type-A adapter.
2. Turn the device on with a short press of the **ON/OFF (4)** button (device that has been turned off cannot be detected by your computer).
3. Your device will be detected by the computer automatically; no drivers need to be installed.
4. Three connection modes will appear on the image: **Device charging**, **File access** (external memory) and **Video stream.**
5. Select connection mode with **UP (7)/DOWN (8)** buttons.
6. Confirm selection with a short press of the **MENU (9)** button.

Device charging

- In this mode, when a computer is used as an external power supply, the icon 100 appears in the status bar. The device will continue operating and all functions are available.
- The Battery pack installed in the device is not being charged!
- A battery recharge feasibility depends on your computer's USB port.
- When the USB is disconnected from the device connected as the **Device charging** mode, the device continues operating from the rechargeable batteries if they are sufficiently charged.

File access

- In this mode the device is detected by the computer as a flash card.
- This mode is designed for work with the files saved in device's memory. The device's functions are not available in this mode; the device turns off automatically.
- If video recording was in progress when connection was made, recording stops and video is saved.
- If the device is in **File access** mode and is disconnected from USB, the device will remain on.

Video stream

The device can be connected to PC or smartphone via USB Type-C cable.

The device is recognized as a web camera and accessed via any app that can work with web cameras. Signal from USB has better quality and latency and can be recorded or edited with software on the connected device.

During the video stream it is possible to record the observed picture. Activation of video recording is only available from the device itself by briefly pressing the **REC (5)** button.

NOTE! Feature is supported only with iPhones that have USB Type-C port.

To view the video stream, use any application (on desktop or mobile platforms) that supports the UVC video standard.

Image transfer latency may occur in some applications. To reduce latency, disable the buffer in the application settings.

Software

Stream Vision 2

Install the Stream Vision 2 application to download files, update firmware, control the device by remote control and broadcast images from your device to a smartphone or a tablet via WiFi.

We recommend using the latest version – Stream Vision 2.

Mobile App
STREAM VISION 2

You can find further guidelines on Stream Vision 2 **here.**

Download from Google Play

Download from App Store

Find answers to frequently asked questions about using Stream Vision 2 **here**.

Stream Vision 2 Manual

Android

iOS

Firmware Update

1. Download the free Stream Vision 2 App in **Google Play** or **App Store**.
2. Connect your Pulsar device to your mobile device (smartphone or tablet).
3. Launch Stream Vision 2 and go to section “Settings”.
4. Select your Pulsar device and press “Check firmware update”.
5. Wait for the update to download and install. Pulsar device will reboot and will be ready to operate.

Important:

- if your Pulsar device is connected to a phone or mobile device, please turn on mobile data transfer (GPRS/3G/4G) to download update;
- if your Pulsar device is not connected to your phone or mobile device but is already listed in “Settings” > “My devices” section, you may use Wi-Fi to download update.

Find answers to frequently asked questions about using Stream Vision 2 **here**.

Is your firmware up to date?

Click **here** to check the latest firmware for your device.

Maintenance

Technical Inspection

It is recommended to inspect your device before each use. Check the following:

- The device should be free of any cracks or deformations.
- The lenses should be free of cracks, grease, dirt or debris.
- The battery level of the device should be full. Electrical sockets should be free of salts, oxidation, or other debris.
- All controls should be responsive.

Technical Maintenance

Maintenance should be carried out at least twice a year and should include the following steps:

- Wipe the exterior surfaces of metal and plastic parts with a cotton cloth. Do not use chemically active substances, solvents, etc. as these will damage the paint.
- Clean the electric terminals of the Battery Pack and device's battery slot using a grease-free organic solvent.
- Check the lenses of the eyepieces, objective and rangefinder. If necessary, remove dust and sand from the optics (it is preferable to use a non-contact method). Cleaning of the exterior surfaces of the optics should be done with cleaners designed especially for this purpose.
- Avoid getting repellent on the housing of the device. This may damage the appearance of the housing coating.

Storage

- Always store the device in its carrying case in a dry, well-ventilated space.
- Remove the Battery Pack for long-term storage.

Troubleshooting

For technical assistance, please submit a request through our Support page.

The device does not turn on

Possible cause
The batteries are completely discharged.
Solution
Charge the batteries.

Device malfunction

Solution
In case of any malfunctions during operation, try resetting the device by long pressing the ON/OFF button for 10 seconds.

The device does not operate on external power supply

Possible cause
USB cable is damaged.

Solution
Replace USB cable.

Possible cause
The external power supply is discharged.
Solution
Charge the external power supply.

The image is blurry, with vertical stripes and uneven background

Possible cause
Calibration is required.
Solution
Carry out calibration according to Calibration Mode section.

Black screen after calibration

Solution
If the image does not clear after calibration, you need to recalibrate.

When the device is turned on, the calibration frequency is at first higher, then decreases (if the automatic calibration mode is enabled)

Possible cause
After turning on the device, it takes some time for the sensor temperature to stabilize. This is normal and is not a defect.

Colored lines appeared on display or image has disappeared

Possible cause
The device was exposed to static electricity during operation.
Solution
After exposure to static electricity, the device may either reboot automatically, or require turning off and on again.

The image is too dark

Possible cause

Brightness or contrast level is too low.

Solution

Adjust the brightness or contrast level in the Quick Menu.

Poor image quality / Detection range reduced

Possible cause
Problems described may arise in adverse weather conditions (snow, rain, fog etc.).

Smartphone or tablet cannot be connected to the device

Possible cause

Password in the device was changed.

Solution

Delete network and connect again inserting the password saved in the device.

Possible cause

There are too many Wi-Fi networks in the area where the device is located which may cause signal interference.

Solution

To ensure stable Wi-Fi performance, move the device to an area with few or no Wi-Fi networks.

Solution

Switch the device's Wi-Fi band.

Possible cause

The device has a 5 GHz network enabled, but the smartphone only supports 2.4 GHz.

Solution

Switch the device's Wi-Fi band to 2.4 GHz.

More information on solving problems with connection to Stream Vision 2 by following the link.

Wi-Fi signal is missing or interrupted

Possible cause
Smartphone or tablet is out of range of a strong Wi-Fi signal. There are obstacles between the device and the smartphone or tablet (e.g., concrete walls).
Solution
Relocate smartphone or tablet into the Wi-Fi signal line of sight.

More information on solving problems with connection to Stream Vision 2 by following the link.

The image of the object being observed is missing

Possible cause
The object is behind glass, which obstructs thermal vision.
Solution
Remove the glass.

There are several light or black dots (pixels) on device's displays or microbolometer

Solution
The presence of such pixels is associated with the manufacturing technology of

displays and microbolometer. It is not a defect.

When using the device at below zero temperatures the image quality is worse than at positive temperatures

Possible cause
In warm climates, objects in the background of a thermal image heat up differently because of thermal conductivity, generating a high temperature contrast and a sharper thermal image.
In cold climates, objects in the background of a thermal image will cool down to roughly the same temperature, which leads to a greatly reduced temperature contrast and a degraded image quality. This is normal for all thermal imaging devices.

Rangefinder will not measure distance

Possible cause

There is an object in front of the receiver or emitter lens preventing signal transmission.

Solution

Make sure that: the lenses are not blocked by your hand or fingers; the lenses are clean.

Possible cause

The device is not being held steadily when measuring.

Solution

Keep the device steady when measuring.

Possible cause

Distance to the object exceeds 1500 m.

Solution

Pick an object at a distance not longer than 1500 m.

Possible cause

Low reflection ratio (for example, tree leaves).

Solution

Pick an object with higher reflection ratio (see point **Additional Information** in section Laser Rangefinder.

Large measurement error

Possible cause
Inclement weather conditions (rain, mist, snow).

The image borders on the display move while the stabilization function is active

Solution

Slight movement of the image borders is normal when the stabilization function is active. To eliminate border movement, turn the function off.

The image moves while the image stabilization function is active at high magnification

Solution

To reduce image movement, perform a **calibration** in the stabilization menu.

To eliminate image movement completely, turn off the stabilization function.

Legal Compliances and Disclaimers

Attention! Merger thermal imaging binoculars require a license if exported outside your country.

Electromagnetic Compliance

This product complies with EU Standard EN 55032:2015, Class A.

Warning! Operation of this equipment in a residential environment could cause radio interference.

Caution – use of controls or adjustments or performance of procedures other than those specified herein may result in hazardous radiation exposure.

Updates of the Product. The manufacturer reserves the right at any time, without mandatory prior notice to the Customer, to make changes to the package contents (subject to the applicable laws, if any), design and characteristics that do not impair the quality of the Product.

Repair. Repair of the product is available within 5 years after purchase of the product.

Limitation of Liability. Subject to mandatory applicable laws and regulations: manufacturer will not be liable for any claims, actions, suits, proceedings, costs, expenses, damages or liabilities (if any), arising out of the use of this product. Operation and use of the product are the sole responsibility of the Customer. Manufacturer's sole undertaking is limited to providing the product(s) and related services in accordance with the terms and conditions of concluded transactions, including provisions established in warranty. The provision of products sold and services performed by Manufacturer to the Customer shall not be interpreted, construed, or regarded, either expressly or implied, as being for the benefit of or creating any obligation toward any third party (other than Distributor, Dealer, Buyer). Manufacturer's liability hereunder for damages, regardless of the form or action, shall not exceed the fees or other charges paid to Manufacturer for the product(s) and/or service(s).

MANUFACTURER WILL NOT BE LIABLE FOR LOST REVENUES OR INDIRECT, SPECIAL, INCIDENTAL, CONSEQUENTIAL, EXEMPLARY, OR PUNITIVE DAMAGES, EVEN IF THE MANUFACTURER KNEW OR SHOULD HAVE KNOWN THAT SUCH DAMAGES WERE POSSIBLE AND EVEN IF DIRECT DAMAGES DO NOT SATISFY A REMEDY.