TELOS Manual

Specifications
About the device
- Description
- Package Contents
- Components and Controls
- Features

Power supply
- Precautions
- Recommendations for Battery Use
- Battery Charging
- Battery Installation
- External Power Supply

Getting started
- Powering on and Image Settings
- Installation of the 3-point strap on the carrying case
- Button Operation

Interface
- Status Bar
- Quick Menu
- Main Menu:
- Enter the Main Menu
- Amplification Level
- Colour Modes
- Smoothing Filter
- User Mode
- PiP Mode
- Display Settings
- Image stabilization
- Bluetooth
- Wi-Fi Settings
- Ballistics
- Rangefinder
- General Settings
- Device Information

Functions
- Ballistics calculator
- Laser Rangefinder
- Video Recording and Photography
- Digital Zoom

PiP Function
Display-Off Function
Wi-Fi Function
Installing the Device on a Tripod
USB Connection
Software
Stream Vision 2
Firmware Update
Maintenance
Technical Inspection
Technical Maintenance and Storage
Troubleshooting
Legal Compliances and Disclaimers

Specifications

Model	**LRF XL50**
SKU	77515
Microbolometer	
Type	uncooled
Resolution, Pixels	1024×768
Pixel Pitch, µm	12
Sensor NETD, mK	< 40
System NETD, mK	< 20
Frame Rate, Hz	50
Optical Characteristics	
Optical Magnification, x	2.5
Smooth Digital Zoom, x	2.5-20 2.5-30 with Zoom Boost
Digital Zoom, x	x1 – x8 x1 – x12 with Zoom Boost
Lens Focus, mm	50
Relative Aperture, D/f′	1.0
Minimum Focus Distance, m/y	5 / 5.5
Eye Relief, mm	14 / 0.55
Exit Pupil Diameter, mm	4 / 0.16

Angular Field of View (Horizontal x Vertical), degree	14×10.5
Linear Field of View, m at 100 m	24.6
Eyepiece Focus Range, Dioptre	+4 / -5
Detection Distance for Deer-Sized Objects, m/y	2300 / 2515
Display	
Type	AMOLED
Resolution, Pixels	1024×768
Operational Characteristics	
Power Supply, V	3 – 4.2
Battery Type/Capacity/Nominal Output Voltage	LPS7i Li-ion Battery Pack / 6400 mAh / DC 3.7 V
External Power Supply	5 V, 9 V (USB Type-C)
Battery Run Time at t=22°C, hours*	7
Degree of Protection, IP Code (IEC60529)	IPX7
Operating Temperature Range, °C / °F	-25 ... +40 / -13 – +104
Dimensions, mm/inch	243×72×90 / 9.57×2.83×3.54
Weight (with battery), kg/oz	0.73 / 25.8
Video Recorder	
Photo/Video Resolution, Pixels	1024×768
Video/Photo Format	.mp4 / .jpg
Built-in Memory	64 GB
Wi-Fi Channel**	
Frequency	2.4/5 GHz
Standard	IEEE 802.11 b/g/n/ac
Characteristics of the Rangefinder	
Wavelength, nm	905
Measurement Range, m/y***	1000/1094

Measurement Accuracy, m	1

* Actual operating time depends on the extent of using Wi-Fi, integrated video recorder and integrated laser rangefinder.

** Reception range may vary depending on various factors: obstacles, other Wi-Fi networks.

*** Depends on the characteristics of the object under observation and environmental conditions.

About the device

Description

Telos LRF thermal imaging monoculars are designed for use both at night-time and during the day and provide exceptional image quality even in adverse weather conditions (fog, smog, rain) and beyond obstacles like branches, tall grass, dense foliage, etc. known to hinder target detection.

Unlike night-vision devices based on electron-optical converters, thermal imaging devices do not need an external light source and are resistant to bright light.

Telos LRF thermal imagers are designed for various applications including hunting, observation, security, terrain orientation, search and rescue operations, etc.

Telos LRF thermal imagers are equipped with a built-in laser rangefinder with a range of up to 1000 m and a measurement accuracy of ± 1 m.

To get started, see the sections:

Battery Charging

Battery Installation

Powering on and Image Setting

Laser Rangefinder

Stream Vision 2

Package Contents

- Telos LRF thermal imager
- LPS7i battery pack with protective cover
- Spare battery compartment cover
- Power adapter
- USB Type-C cable with USB Type-A adapter
- Case
- Hand strap
- Quick start guide
- Lens cloth
- Warranty card

Components and Controls

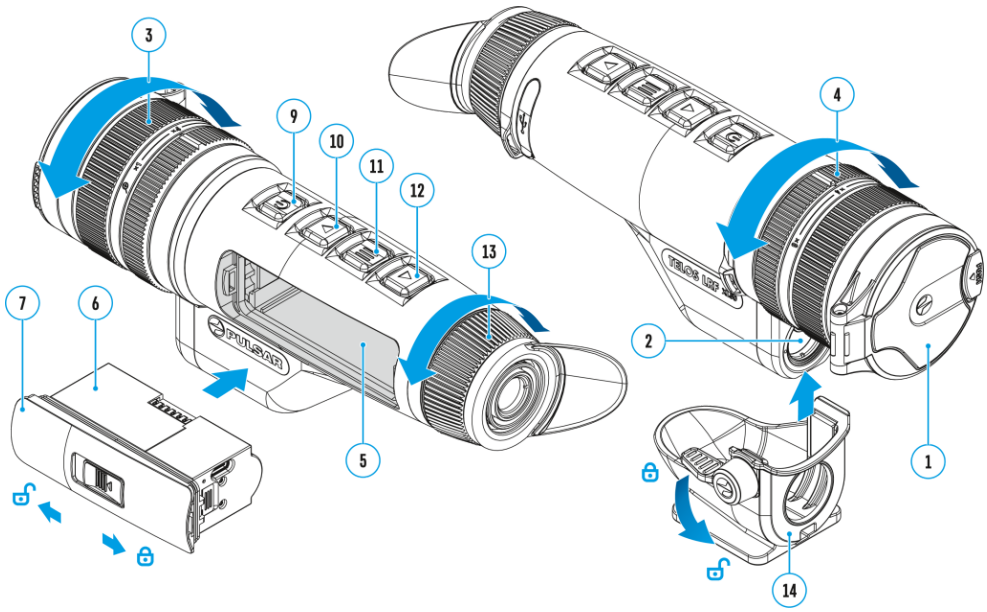

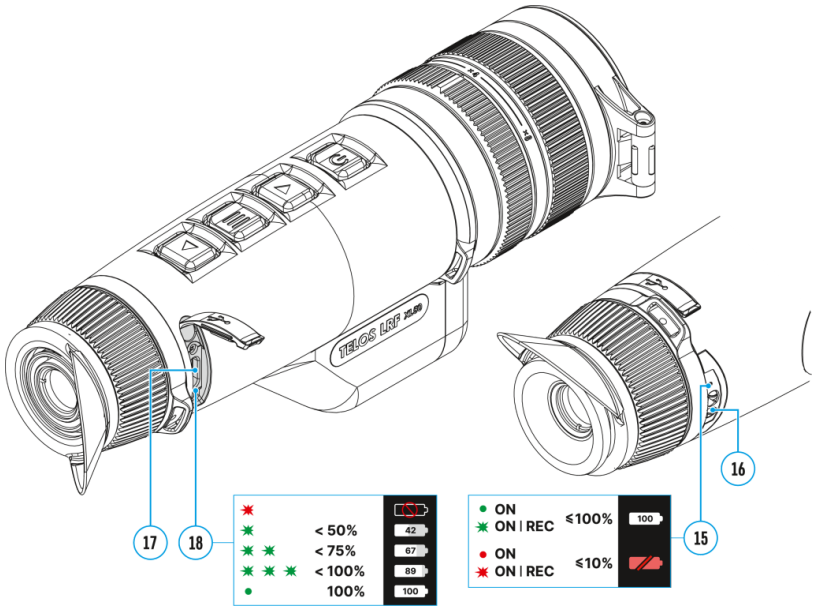

1. Lens cover
2. Laser rangefinder
3. Lens focus ring
4. Digital zoom adjustment ring
5. Battery compartment
6. LPS7i battery
7. Battery compartment cover
8. Battery protective cover
9. ON/OFF/Calibration button
10. UP/REC button
11. MENU button
12. DOWN/LRF button
13. Eyepiece diopter adjustment ring
14. Tripod adapter (available separately)
15. Operation status LED indication
16. Microphone
17. USB Type-C connector
18. LED indication of battery charge in the device

LED indicator **(15)** displays the current status of the device:

LED Indicator	Operating Mode
●	Device is turned on

🟢	The device is turned on/video recording
🔴	The device is turned on/battery charge < 10%
🔴	The device is turned on/video recording/battery charge < 10%

Features

- Functional and ergonomic design
- 9-colour display palette
- 3 calibration modes: Manual, Semi-Automatic, Automatic
- Detection range up to 2300 m / 2515 yds
- Smooth digital zoom 2.5-20x
- Three levels of sensitivity enhancement: Normal, High, Ultra
- Integrated laser rangefinder
- Display-Off function
- Display dimming function
- Auto shutdown function
- Image stabilization function
- Device firmware update using the free Stream Vision 2 App
- Defective pixel repair
- Ballistic calculator
- Wide operating temperature range (-25°C to +40°C / -13°F to +104°F)
- Fully waterproof (IPX7 rated)

Video/Audio Recording

- Built-in video and sound recorder
- Integration with iOS and Android devices
- Wi-Fi remote control and viewing using a smartphone
- Storing photos and videos in Cloud when using the Stream Vision 2 App

Battery Pack

- Quick Change Li-Ion Battery Pack LPS7i

- Charging from USB Power Bank
- Quick-Charge power delivery

Power supply

Precautions

- It is not recommended to charge the battery with the USB cable and wireless charger at the same time. This will not increase the charge rate and may damage the battery.
- Use the USB Type-C cable and power adapter supplied with the device (or purchased separately) to charge the LPS 7i batteries.
- Follow the safety precautions described in its Manual when using the wireless charger.
- Do not place any foreign objects between the battery and wireless charger platform.
- Do not charge the battery immediately after bringing it from cold to warm. Wait at least 30 minutes for the battery to warm up.
- Do not leave the battery unattended while charging.
- Do not use the power adapter and wireless charger if they have been modified or damaged.
- Do not leave the battery plugged in after charging is complete.
- Do not expose the battery to high temperatures and naked flame.
- Do not use the battery as a power source for devices that do not support LPS 7i batteries.
- Do not disassemble or deform the battery.
- Do not drop or strike the battery.
- Do not submerge the battery.
- Keep the battery out of the reach of children.

Recommendations for Battery Use

- The battery should be partially charged (50 to 80 %) for long-term storage.
- Charge at an ambient temperature of 0°C to +35°C (32°F to 95°F) or the lifespan of the battery will decrease significantly.
- Using the battery at sub 0°C (<32°F) ambient temperature decreases battery capacity. This is normal and not a defect.
- Using the battery at temperatures outside the range of -25°C to +50°C (-13°F to 122°F) may reduce battery life.
- The battery is short-circuit protected. Any situation that may cause short-circuiting should be avoided.

Battery Charging

The **Telos LRF** thermal imager comes with an LPS7i rechargeable Lithium-ion battery. LPS7i batteries support USB Power Delivery fast charging technology when using a standard charging set (USB Type-C cable, power adapter). Before first use, make sure the battery is fully charged. LPS 7i batteries also support wireless charging.

The icon in the status bar will flash when the battery is low. The battery needs to be charged.

Option 1. USB Charging

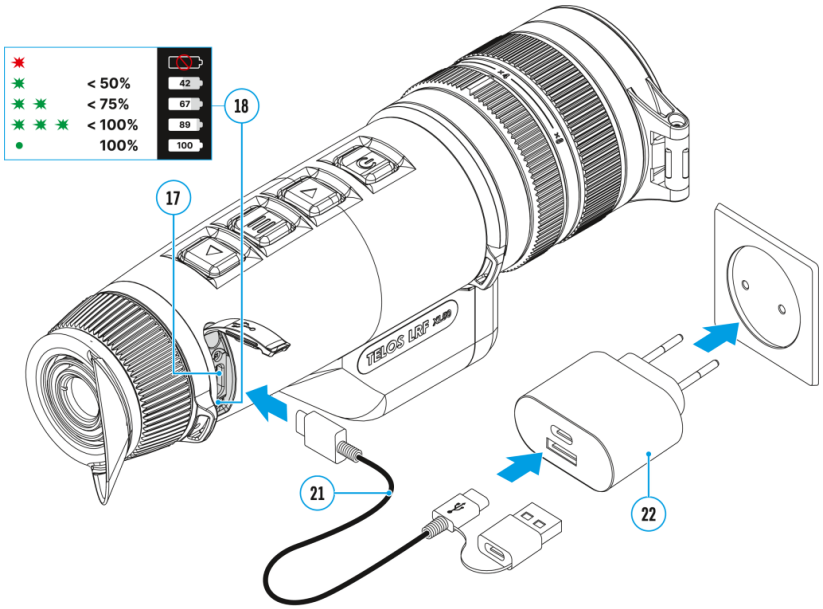

1. **Install** the LPS7i battery in the battery compartment of the device.

2. Connect the USB cable **(21)** to the USB Type-C connector **(17)** of the device.
3. Connect the other end of the USB cable **(21)** to the Power Adapter **(22)** by removing the USB Type-A adapter.
4. Plug the Power Adapter **(22)** into a 100-240 V socket.
5. Wait until the battery is fully charged (indication in the status bar: **100**).

If the device is off, the LED indicator (18) will display the battery charge status:

LED indication	Battery charge status
●	Battery defective. Do not use the battery!
✸	Battery charge level is from 0% to 50%
✸ ✸	Battery charge level is from 51% to 75%
✸ ✸ ✸	Battery charge level is from 76% to 99%
●	Battery is full

Option 2. Charging the battery via USB

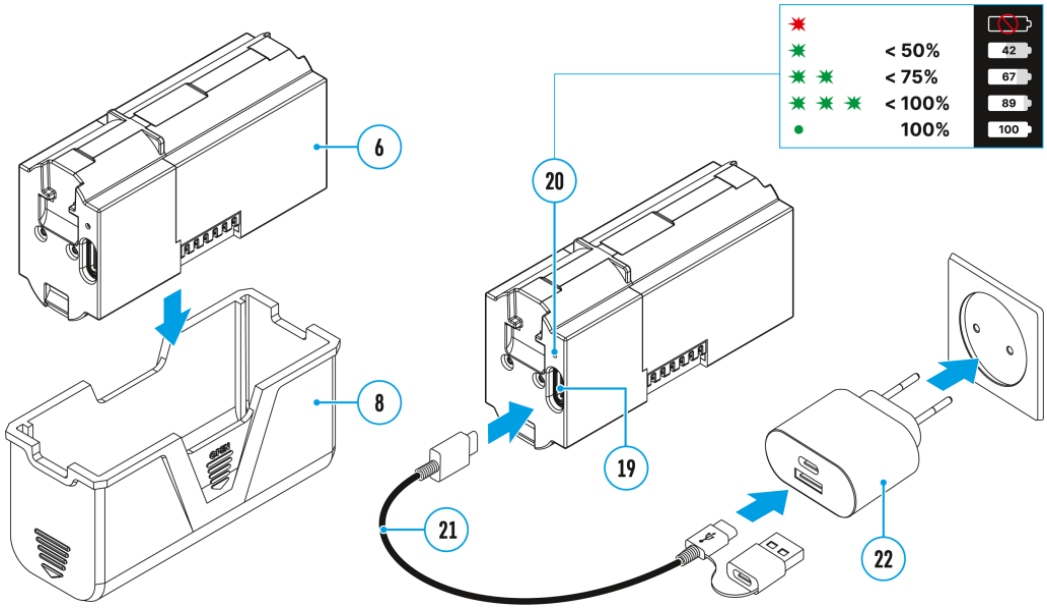

1. Remove the protective cover **(8)**.
2. Connect the plug of the USB Type-C cable **(21)** to the USB Type-C connector **(19)** of the battery.

3. For fast charging, connect the second end of the USB Type-C cable **(21)** to the Type-C connector of the power adapter **(22)** by removing the Type-A adapter from the plug. When connected to a computer or a Type-A power adapter, the battery will charge at normal speed.
4. Plug the power adapter **(22)** into a 100-240 V socket.
5. LED **(20)** will display battery charge level (see Table).

LED indication	Battery charge status
●	Battery defective. Do not use the battery!
✸	Battery charge level is from 0% to 50%
✸ ✸	Battery charge level is from 51% to 75%
✸ ✸ ✸	Battery charge level is from 76% to 99%
●	Battery is full

Option 3. Wireless Charging

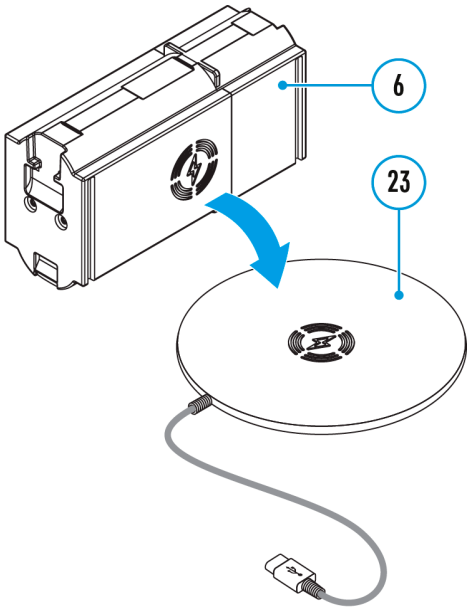

1. Place the battery **(6)** with the sign side on the wireless charger* **(23)**. For more efficient wireless charging, align the lightning bolt icon on the battery with the centre of the charger platform **(23)**.
2. Turn on the wireless charger according to its instruction manual.
3. LED **(20)** will display battery charge level (see Table).

* Third party-purchasing. The LPS7i battery works with all QI standard wireless chargers.

Note: Charging with a USB cable is significantly faster than using a wireless charger.

Battery Installation

Note: Trail 3 LRF and Telos devices require different battery compartment covers. Before installing the LPS7i battery, ensure the correct cover for your device is installed.

1. Install the cover **(7)** on the LPS7i battery **(6)**.

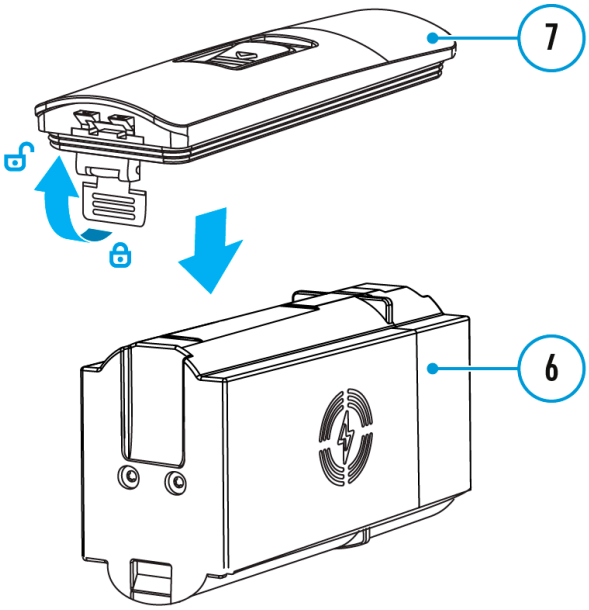

2. Insert the battery **(6)** into the battery compartment **(5)** until you hear a click. The battery contacts must face the top of the device (see diagram).

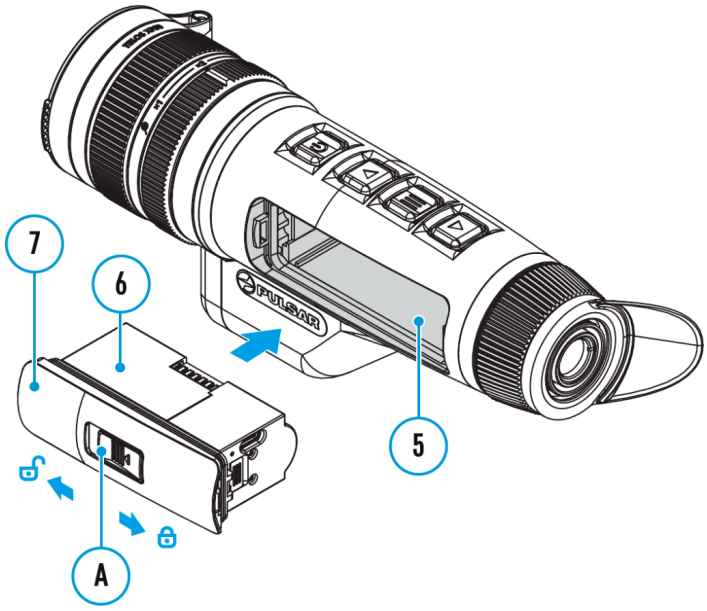

3. To remove the battery **(6)**, slide the switch **(A)** on the cover **(7)** to the left .

External Power Supply

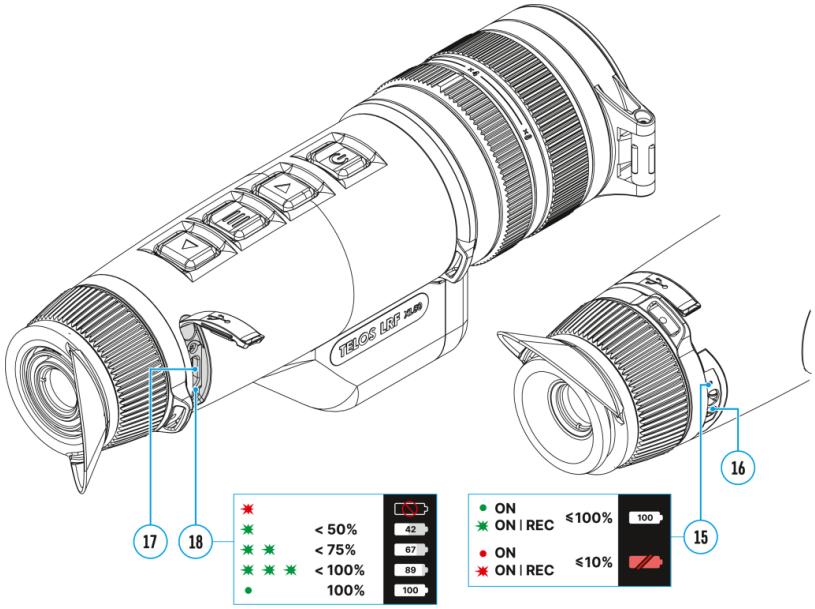

Power can be supplied from an external source such as a 5 V or 9 V power bank.

1. Connect the external power source to the USB Type-C connector **(17)** on the device.
2. The device will switch to draw power from the external source while the LPS7i battery is gradually recharged.
3. A battery icon 100 will appear on the display showing the percentage-charged level.
4. An icon 100 will be displayed when the device is powered by an external power source and the LPS7i battery is not connected.
5. The device automatically switches to the LPS7i battery when the external power supply is disconnected.

Attention! Charging LPS7i batteries from an external source at temperatures below 0°C (<32°F) can reduce battery life. When using external power, connect the power bank to the device only after it has been turned on and working (warming) for at least several minutes.

Getting started

Powering on and Image Settings

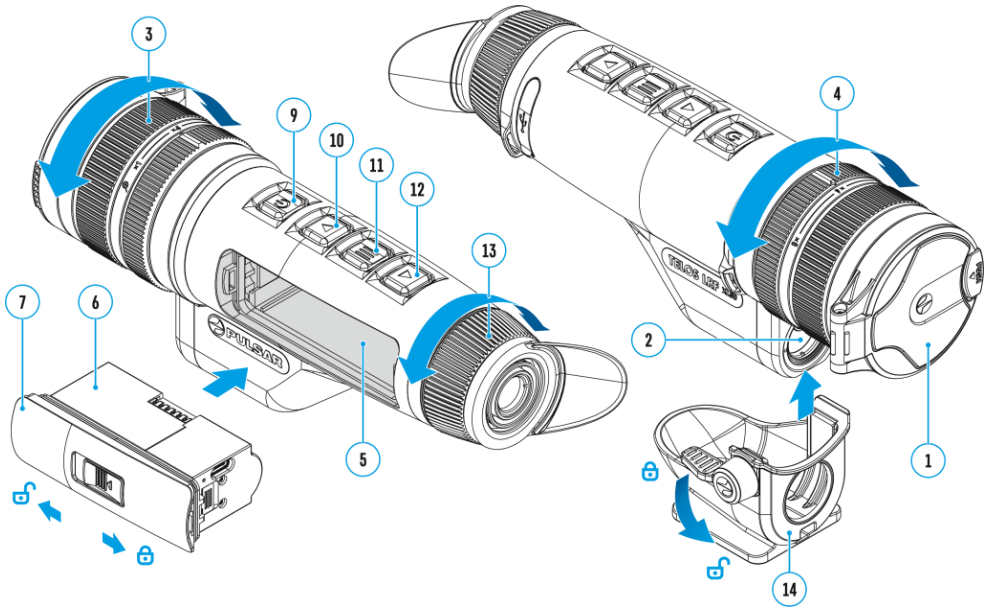

1. Open the lens cover **(1)**.
2. Press the **ON/OFF (9)** button briefly to turn on the device.
3. Adjust the eyepiece diopter ring **(13)** until the symbols in the display are sharp.
4. Rotate the lens focus ring **(3)** to focus on the object being observed.
5. To change the magnification, turn the digital zoom adjustment ring **(4)**.
6. Enter the main menu with a long press of the **MENU (11)** button and select the desired **calibration mode** : manual (M), semi-automatic (SA) or automatic (A).
7. Calibrate the image by briefly pressing the **ON/OFF (9)** button (if the SA or M calibration mode has been selected). Close the lens cover when calibrating manually.
8. Activate the quick menu by briefly pressing the **MENU (11)** button to adjust the brightness and contrast of the display and select the desired **amplification level** (**"Normal"** N, **"High"** H, **"Ultra"** U (for more details see the **Quick Menu** section).

9. Activate the Smoothing Filter in the main menu to improve the image as the amplification level increases.
10. Select one of the colour palettes in the main menu (for more details see the Colour Modes section).
11. Upon completion of use turn the device off by a long press of the **ON/OFF (9)** button.

Observation conditions: time of day, weather, type of observation objects affect the image quality. Custom settings for brightness, display contrast as well as the function of adjusting the microbolometer sensitivity amplification level will help to achieve the desired quality in a particular situation.

Warning! Never point the lens at intensive energy sources such as laser radiation emitting devices or the sun. It can damage electronic components in the device. The warranty does not cover damage arising from failure to comply with operating instructions.

Adjusting the position of the hand strap

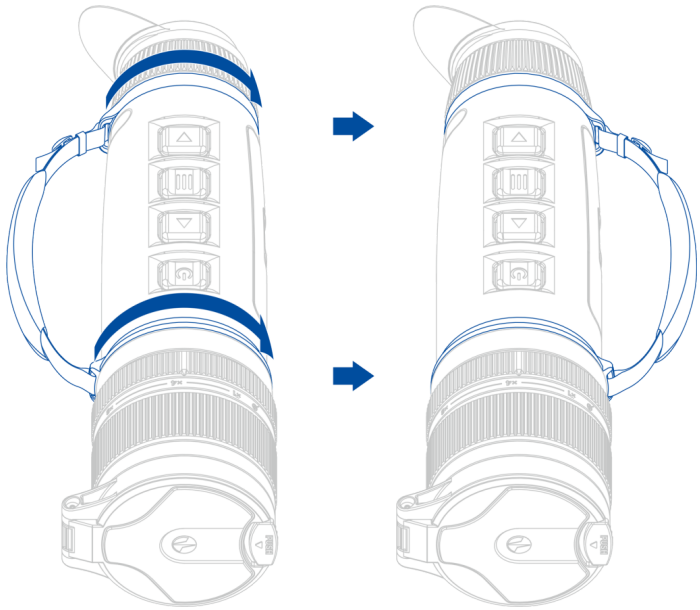

Opening the lens cover

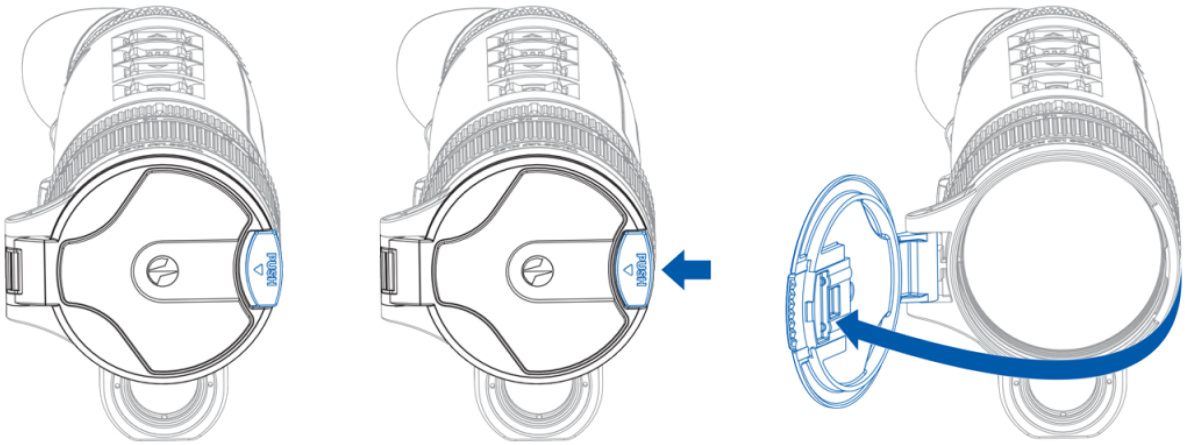

Lens cover positioning (right/left)

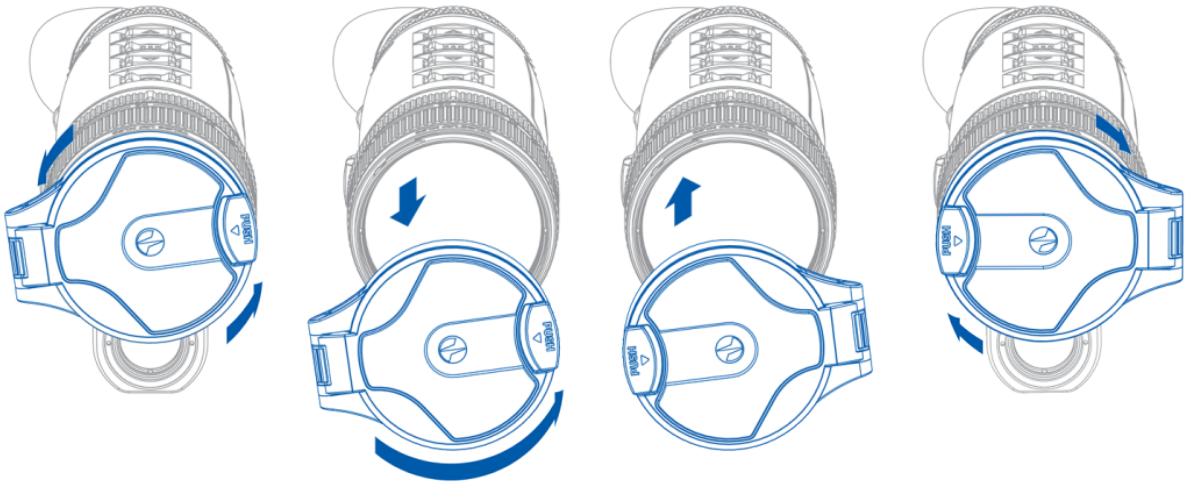

Installing a neck strap (sold separately)

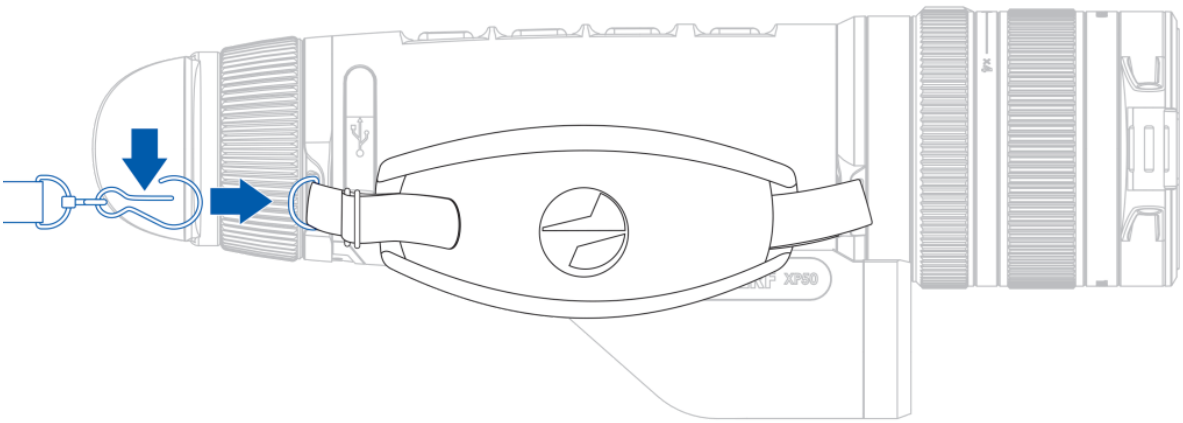

Installation of the 3-point strap on the carrying case

The carrying case comes with 3-point-strap for comfortable carrying of the case on the chest during intensive movement.

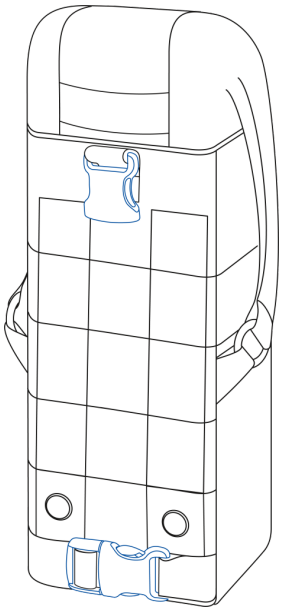

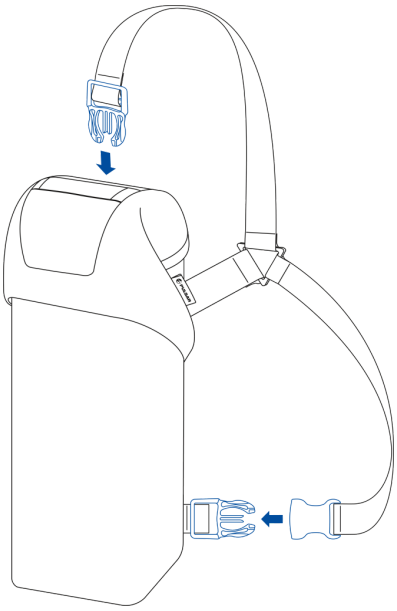

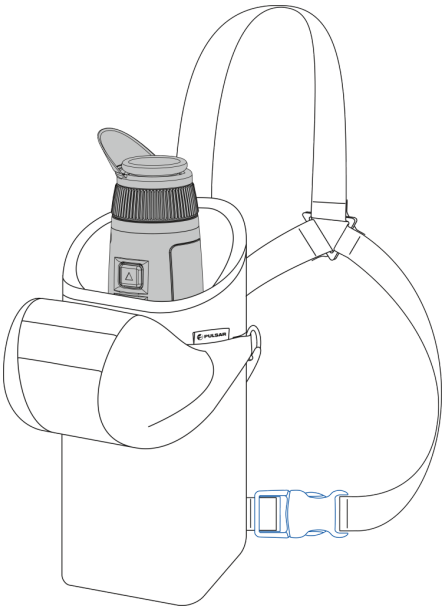

Button Operation

Operation	Button
Power device on	⏻ short press
Power device off	⏻ long press for 3 secs
Turn display off	⏻ long press for less than 3 secs
Turn display on	⏻ short press
Calibrate the microbolometer	⏻ short press
Turn on/off the White Hot palette	⏻ long press
Video Recorder	**Button**
Start/pause/resume video recording	△ short press
Stop video recording	△ long press
Switch to video / photo	△ long press
Capture a photo	△ short press
Laser Rangefinder	**Button**

Turn on rangefinder	▽	short press
Single distance measurement	▽	short press
Activate rangefinder scan mode	▽	long press
Deactivate rangefinder scan mode	▽	short press
Turn off rangefinder	▽	long press
Main Menu	**Button**	
Enter main menu	|||	long press
Navigation upwards/rightwards	△	short press
Navigation downwards/leftwards	▽	short press
Confirm selection	|||	short press
Exit submenu without confirming selection	|||	long press
Exit menu (switch to viewing mode)	|||	long press
Quick Menu	**Button**	
Enter quick menu	|||	short press
Switch between quick menu options	|||	short press
Increase value	△	short press
Decrease value	▽	short press
Exit quick menu	|||	long press

Interface

Status Bar

The status bar at the bottom of the display shows current operating statuses via icons, including:

- Colour Mode:

  – White hot

  – Black hot

- Image stabilization (displayed when the function is on)
- Amplification level
- Smoothing Filter (displayed when the function is on)
- Calibration Mode (in Automatic calibration mode a countdown timer :05 will appear instead of the calibration mode icon 5 seconds before automatic calibration begins).
- Current magnification
- Microphone
- Bluetooth:

  – Bluetooth is on

  – the device with Bluetooth is connected

- Wi-Fi Connection
- Time
- Power Indication:

100 – charge level if the device is powered by a battery

100 – charge level if the device is charging and powered by a battery

100 – no battery, the device is connected to an external power supply

– low battery charge

Quick Menu

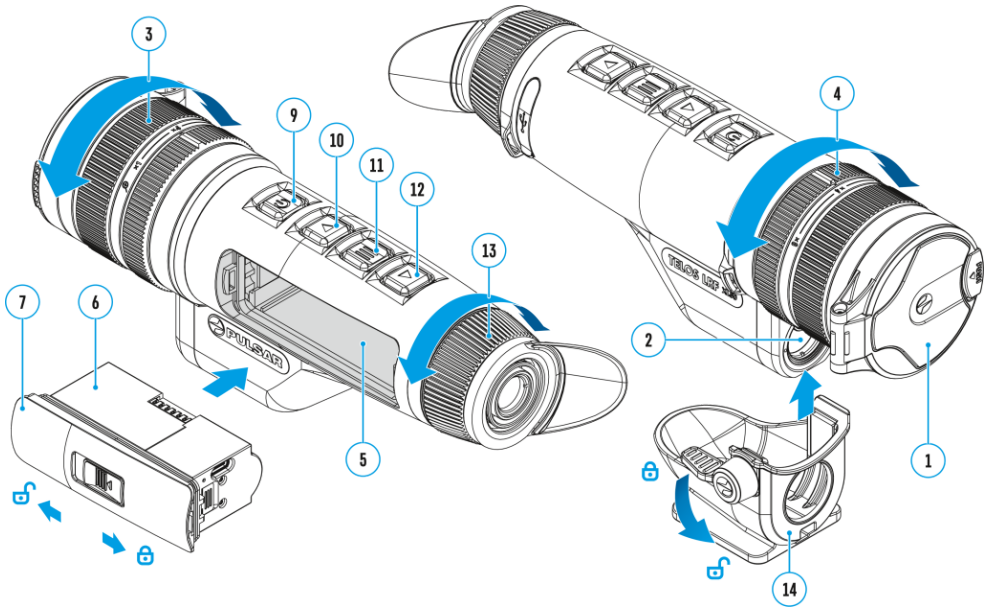

The quick menu is used to quickly access the settings for brightness, contrast, and amplification modes.

- Enter the menu by briefly pressing the **MENU (11).**
- A short press of the **MENU (11)** button enables you to toggle between functions, as described below.

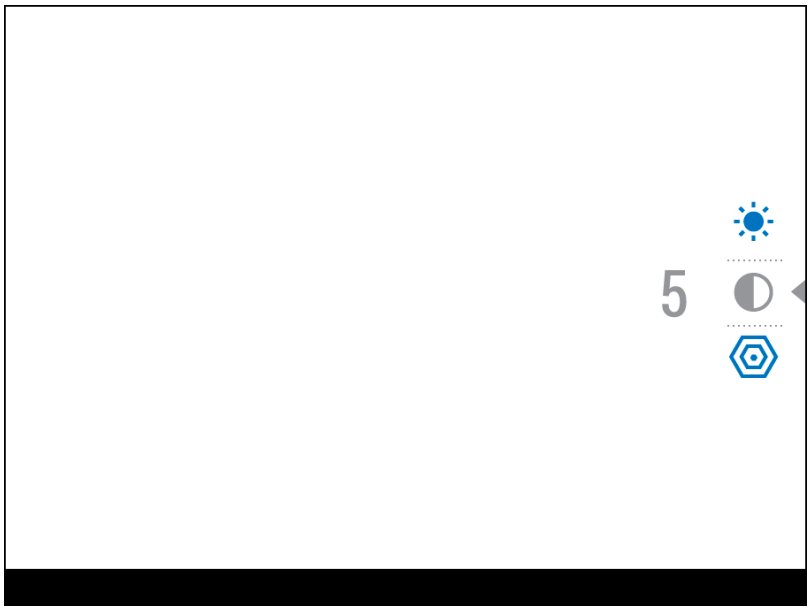

Brightness – press the **UP (10)/DOWN (12)** buttons to change display brightness from 0 to 20.

Contrast – press the **UP (10)/DOWN (12)** buttons to change image contrast from 0 to 20.

Note: display brightness and contrast settings are saved in the memory when the device is turned off.

Amplification Levels – allows you to select one of three **amplifying levels of sensitivity**.(Normal N, High H, Ultra U).

Note: To maintain brightness and contrast settings when changing amplifying levels, activate **User mode**.

- Press and hold the **MENU (11)** button to exit the menu or wait for 10 seconds to exit automatically.

Main Menu:

Enter the Main Menu

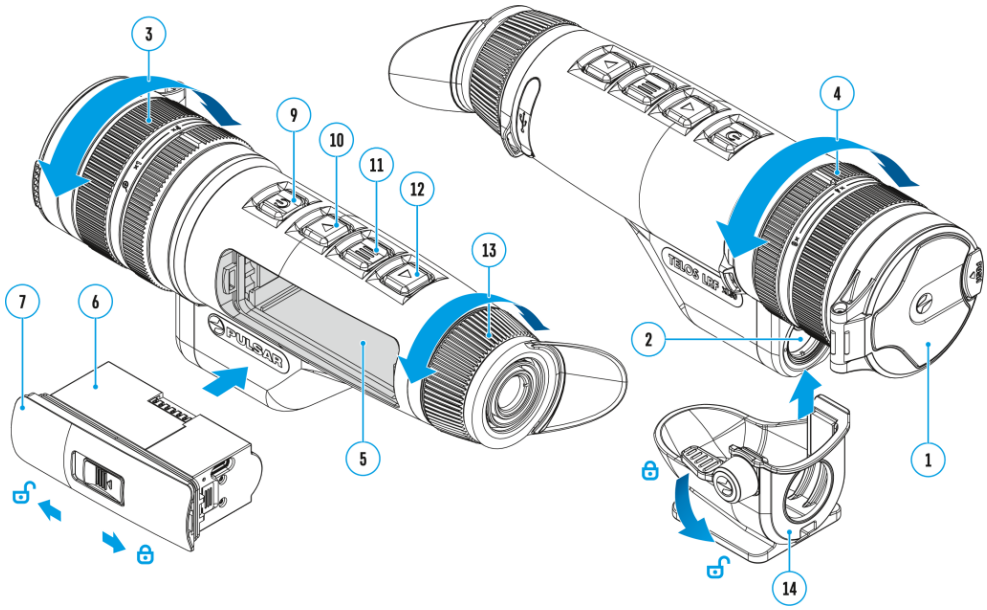

1. Enter the main menu with a long press of the **MENU (11)** button.
2. Press the **UP (10)/DOWN (12)** buttons to move through the menu items.
3. Press the **MENU (11)** button briefly to select the menu item.
4. Press and hold the **MENU (11)** button to exit the menu or wait for 10 seconds to exit automatically.
5. Automatic exit takes place after 10 seconds of inactivity.

Note: When entering the main menu, the background image darkens to enhance the menu visibility. This is normal and not a defect.

General View of Menu

Tab 1

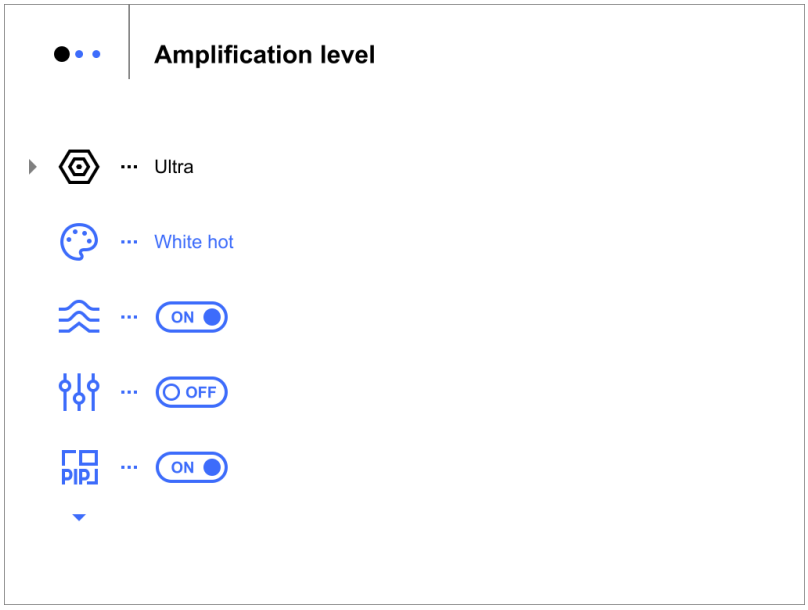

Tab 2

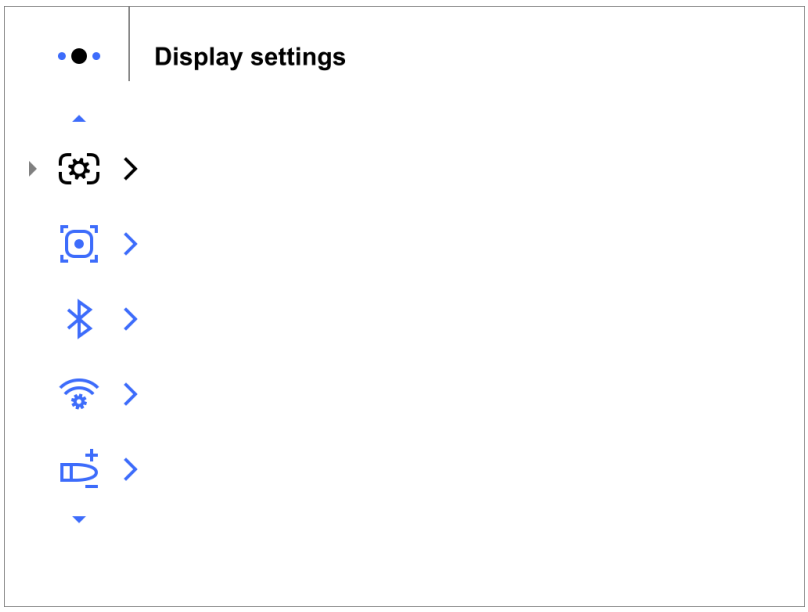

Tab 3

Amplification Level

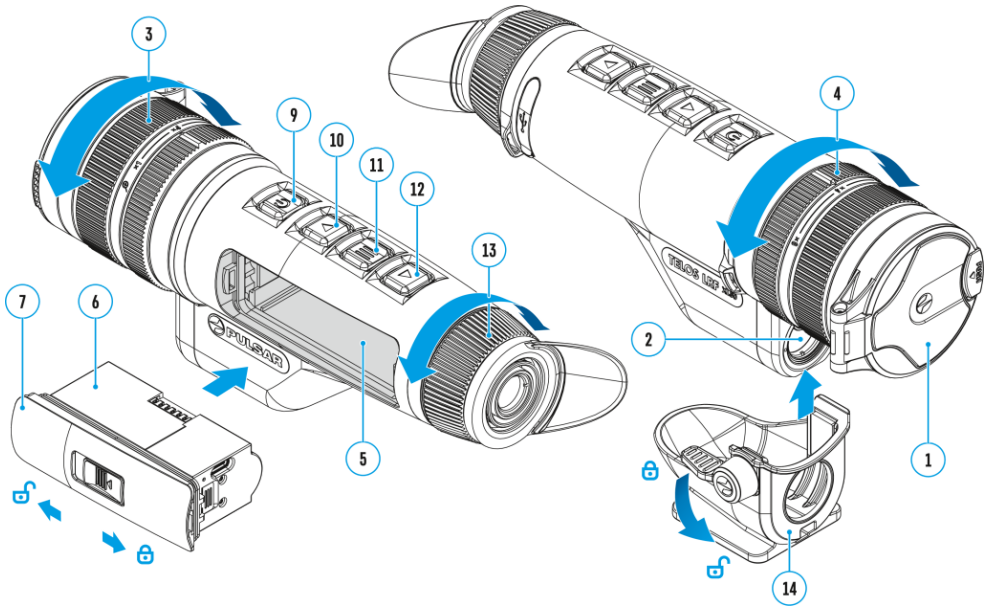

The Normal N, High H, Ultra U sensitivity enhancement features are the latest in software algorithm offerings from Pulsar that enhance the quality of detection and object recognition, regardless of observation conditions. When the temperature contrast decreases due to conditions such as fog, precipitation or high humidity, increasing the amplification level can optimize the image picture.

To reduce digital distortion, activate the Smoothing Filter in the main menu.

Normal

High

Ultra

Quick Menu:

1. Enter the quick menu by briefly pressing the **MENU (11)** button.
2. Briefly press the **MENU (11)** button to select the **Amplification Level** icon.
3. Use the **UP (10)/DOWN (12)** buttons to select one of three amplifying levels of sensitivity (Normal N, High H, Ultra U).
4. Press and hold the **MENU (11)** button to exit the menu or wait for 10 seconds to exit automatically.

Main Menu:

1. Press and hold the **MENU (11)** button to enter the main menu.
2. Use the **UP (10)/DOWN (12)** buttons to select the **Amplification Level** icon.
3. Press the **MENU (11)** button briefly to enter the Amplification Level submenu.

4. Use the **UP (10)/DOWN (12)** buttons to select one of three amplifying levels of sensitivity (Normal N, High H, Ultra U).
5. Press the **MENU (11)** button briefly to confirm the selection.

Colour Modes

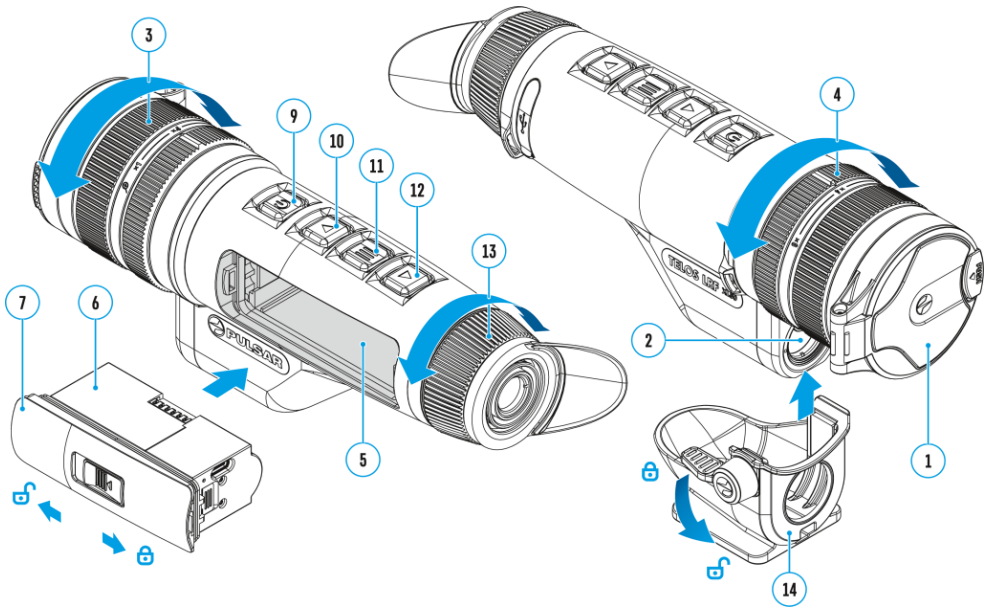

Colour palette selection.

White Hot is the default display mode.

To select an alternative palette, do the following:

1. Press and hold the **MENU (11)** button to enter the main menu.
2. Use the **UP (10)/DOWN (12)** buttons to select **Colour Modes** icon.
3. Press the **MENU (11)** button briefly to enter the submenu.
4. Use the **UP (10)/DOWN (12)** buttons to select the desired palette.
5. Press the **MENU (11)** button briefly to confirm the selection.

Note: you can also switch from a selected color palette to the **White hot** palette with a long press of the **DOWN (12)** button.

Tip: to preserve brightness and contrast values when switching palettes, activate User Mode.

- **Black Hot** – a black and white palette where white = cold; black = hot
- **Green**
- **Red Hot**
- **Red Monochrome**
- **Rainbow**
- **Ultramarine**
- **Violet**
- **Sepia**

Attention! The device should not be used to accurately measure temperature. The images generated are based on temperature contrast rather than true temperature readings.

Smoothing Filter

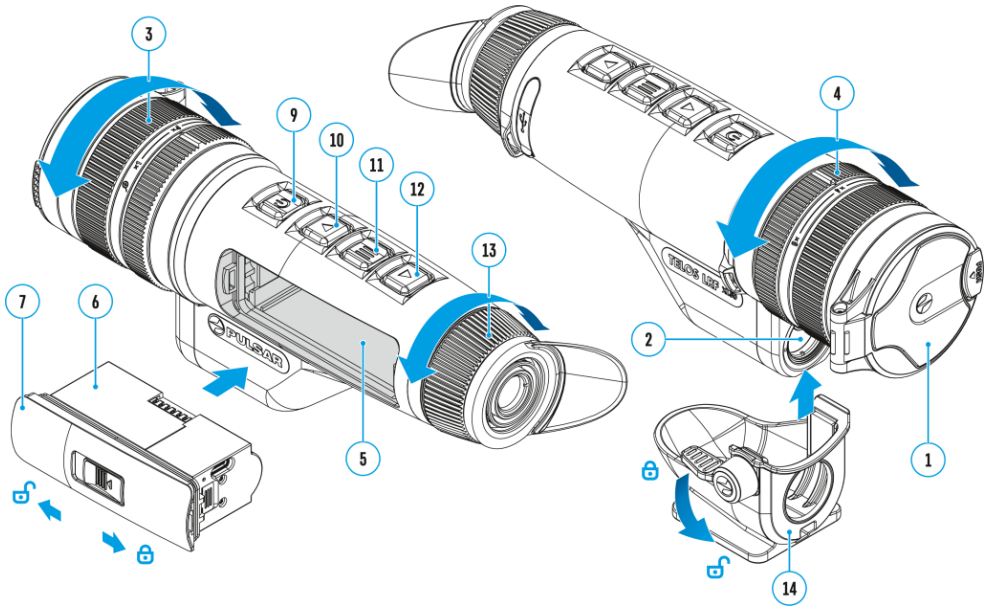

Used to reduce digital distortion while maintaining a high level of sensitivity.

Smoothing Filter Off

Smoothing Filter On

1. Press and hold the **MENU (11)** button to enter the main menu.
2. Use the **UP (10)/DOWN (12)** buttons to select the **Smoothing Filter** icon.
3. Press the **MENU (11)** button briefly to turn the filter on/off.

User Mode

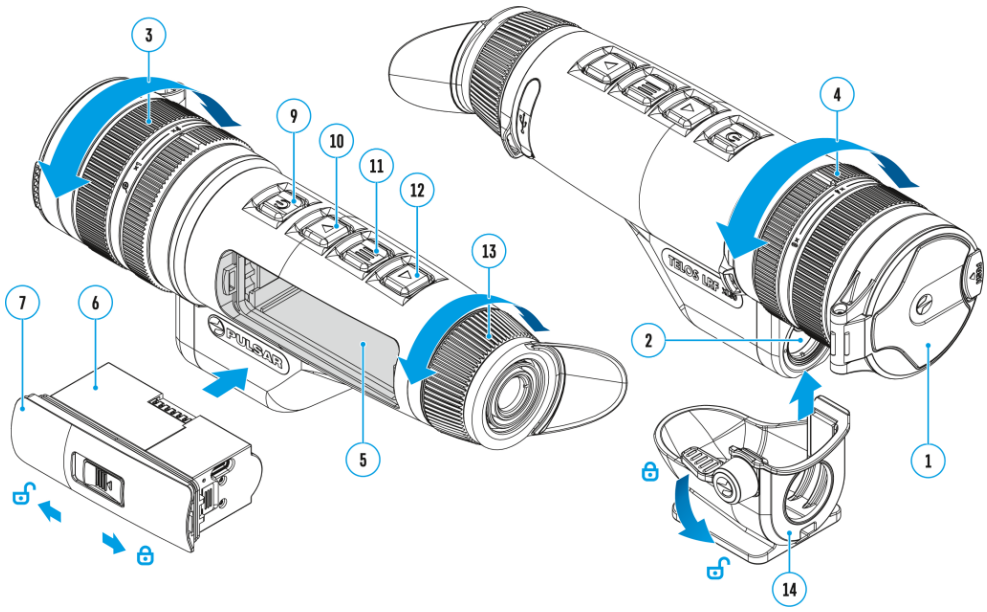

The User Mode function saves selected brightness and contrast settings in the device's memory providing optimal image quality for the next use of the thermal imager immediately, with no additional adjustments needed.

1. Press and hold the **MENU (11)** button to enter the main menu.

2. Use the **UP (10)/DOWN (12)** buttons to select the **User Mode** icon.
3. Press the **MENU (11)** button briefly to turn the mode on/off.

PiP Mode

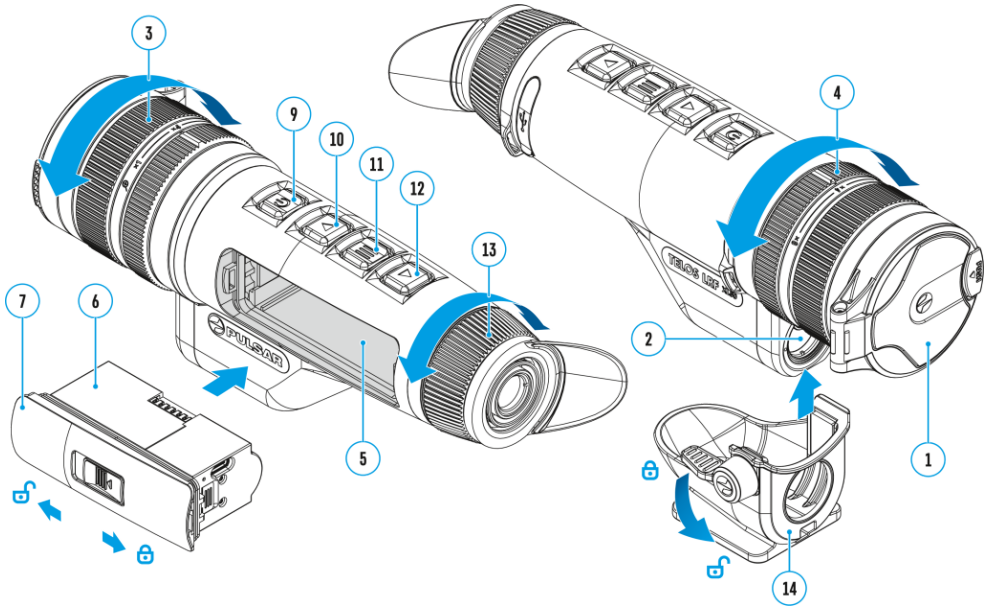

Picture in Picture mode

1. Press and hold the **MENU (11)** button to enter the main menu.
2. Use the **UP (10)/DOWN (12)** buttons to select the **PiP Mode** icon.
3. Press the **MENU (11)** button briefly to turn on/off.

Display Settings

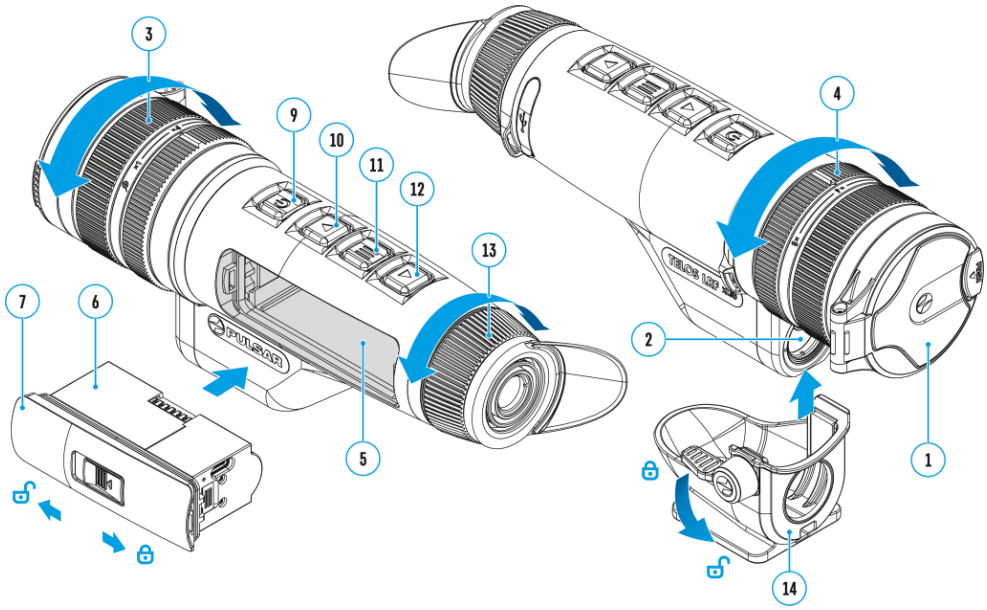

1. Press and hold the **MENU (11)** button to enter the main menu.
2. Use the **UP (10)/DOWN (12)** buttons to select the **Display Settings** menu item.
3. Press the **MENU (11)** button briefly to enter the submenu.

Display dimming

The dimming function is designed to reduce the brightness of the display when using the device in the dark to reduce eye strain.

The Overlay Brightness value in dimming mode will be retained when the function is turned on again.

- Press the **MENU (11)** button to select *On* for turning on the function or *Off* for turning it off.

Overlay Brightness

Adjust brightness level of the icons and screensavers (Pulsar, Display off) on the display.

1. Press and hold the **MENU (11)** button to enter the main menu.
2. Use the **UP (10)/DOWN (12)** buttons to select the **Overlay Brightness** icon.
3. Press the **MENU (11)** button briefly to enter the submenu.
4. Use the **UP (10)/DOWN (12)** buttons to select the desired brightness level from 0 to 10.
5. Press the **MENU (11)** button briefly to confirm the selection.

Auto Display off

If this function is enabled, the display turns off automatically when the device is in a vertical position. This helps save battery power when the device is not being used.

1. Use the **UP (10)/DOWN (12)** buttons to select the **Auto Display off** icon.
2. Press the **MENU (11)** button to select *On* for turning on the function or *Off* for turning it off.
3. If you want to switch on the display when the device is in an vertical position, press the **ON/OFF (9)** button.

Image stabilization

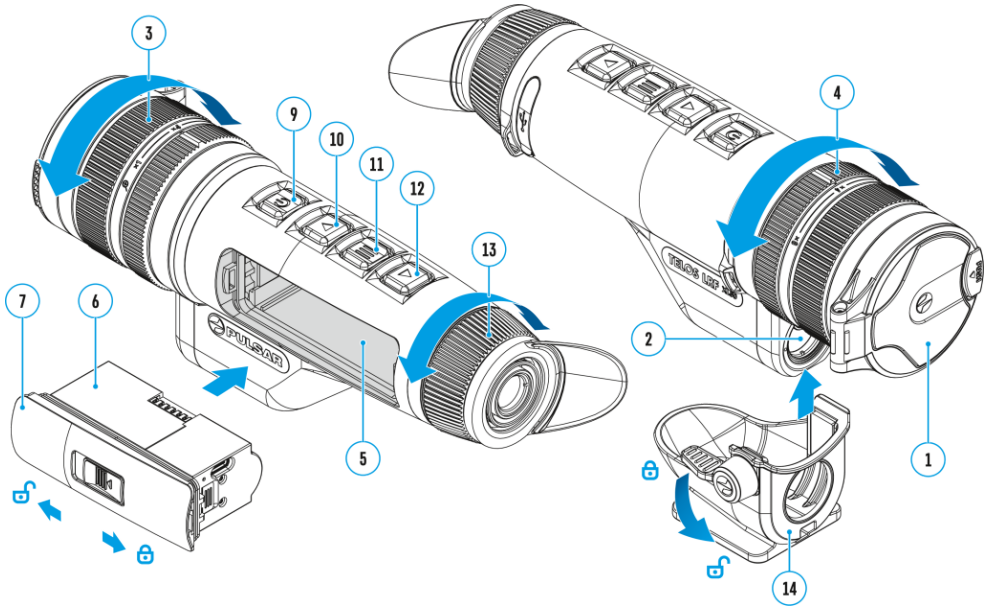

The stabilization function allows you to get a clearer and more stable image in the case of hand tremor when observing for long periods of time or when working at high magnification.

Stabilization Activation

1. Press and hold the **MENU (11)** button to enter the main menu.
2. Use the **UP (10)/DOWN (12)** buttons to select the **Image Stabilization** icon.
3. Press the **MENU (11)** button briefly to enter the submenu.
4. Press the **MENU (11)** button briefly to turn **Stabilization** on/off.

Note: the image stabilization function is automatically switched off during laser rangefinder operation.

Stabilization Calibration

If the image quality decreases during long-term use of stabilization, it is recommended to perform calibration.

1. Press and hold the **MENU (11)** button to enter the main menu.
2. Use the **UP (10)/DOWN (12)** buttons to select the **Image Stabilization** icon.
3. Press the **MENU (11)** button briefly to enter the submenu.
4. Use the **UP (10)/DOWN (12)** buttons to select the **Stabilization Calibration** menu item
5. Press the **MENU (11)** button briefly to enter the function menu.
6. Put device on a stable surface to avoid any movement and press “Calibrate”. The process will take about 10 seconds.

Bluetooth

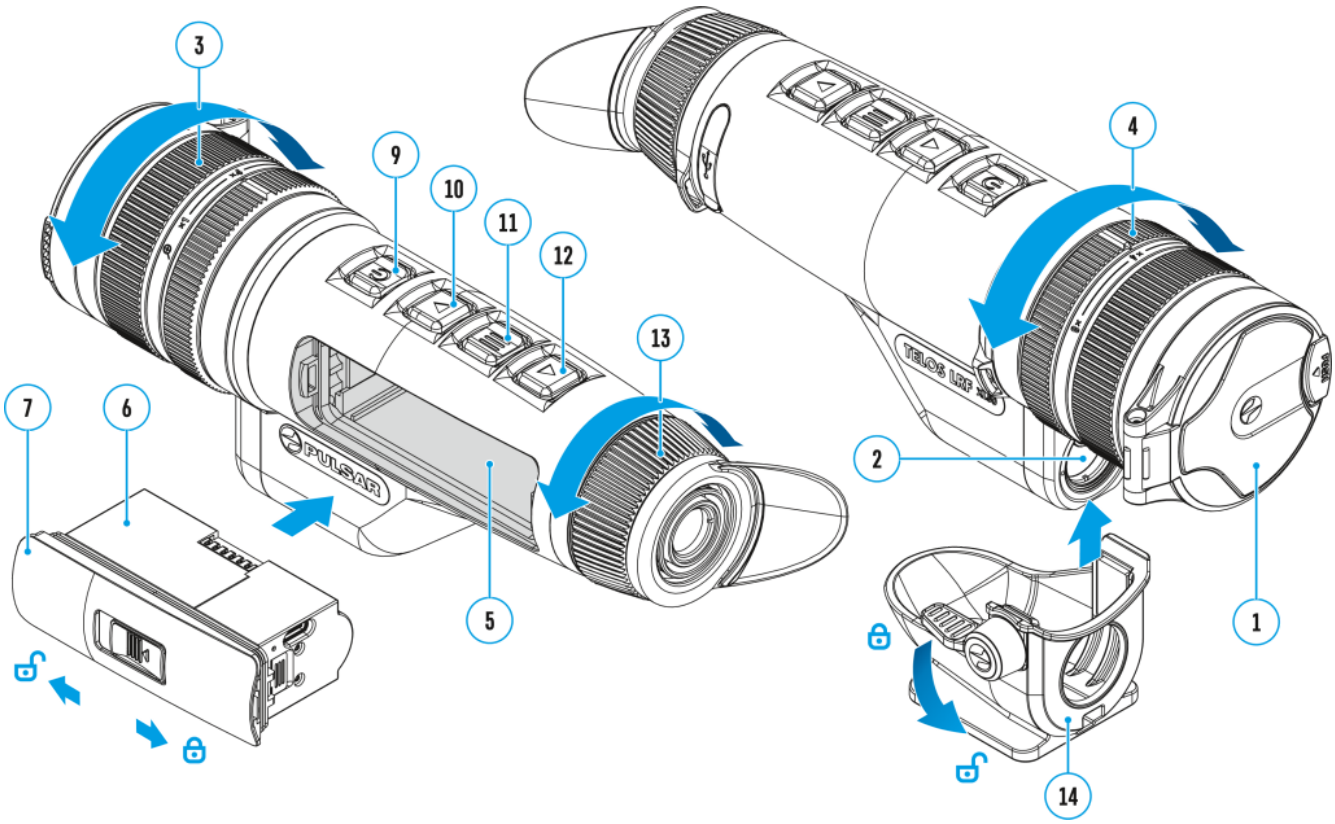

Bluetooth Activation

Turn on/off Bluetooth

1. Press and hold the **MENU (11)** button to enter the main menu.

2. Use the **UP (10)/DOWN (12)** buttons to select the **Bluetooth** menu item.

3. A short press of the **MENU (11)** button opens the submenu.

4. Turn Bluetooth on/off with a short press of the **MENU (11)** button.

5. Press and hold down the **MENU (11)** button to exit the submenu.

Bluetooth Pairing with Stream Vision Ballistics App

1. Turn on the Bluetooth module.

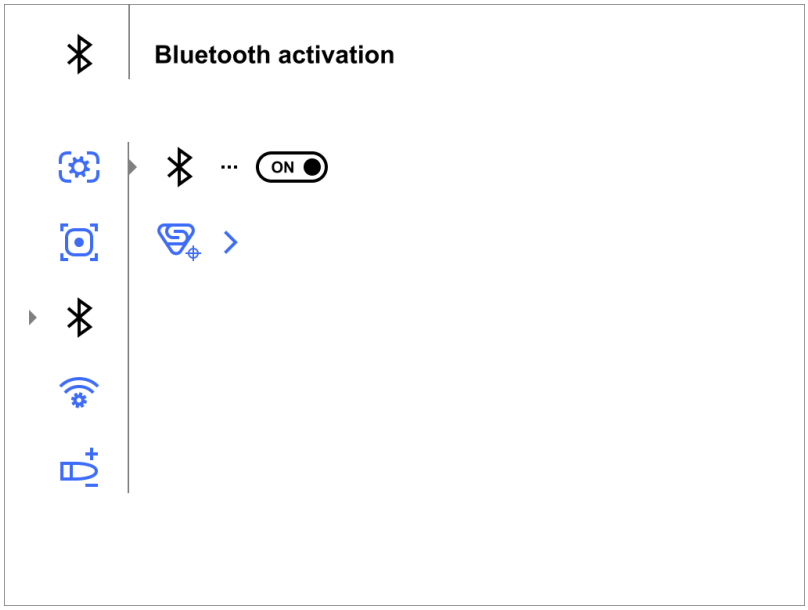

2. In the **Bluetooth** section of the menu, use the **UP (10)/DOWN (12)** buttons to select the **Bluetooth pairing** menu item.

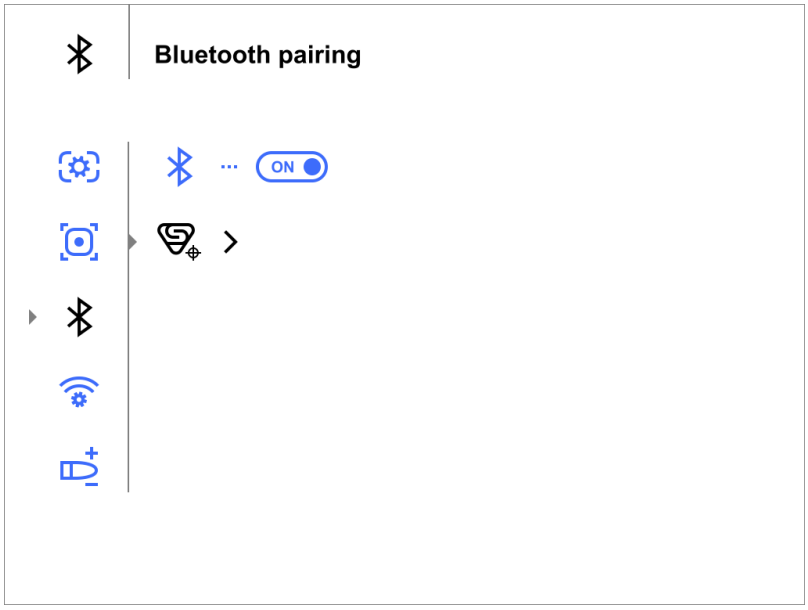

3. Confirm your selection with a short press of the **MENU (11)** button.

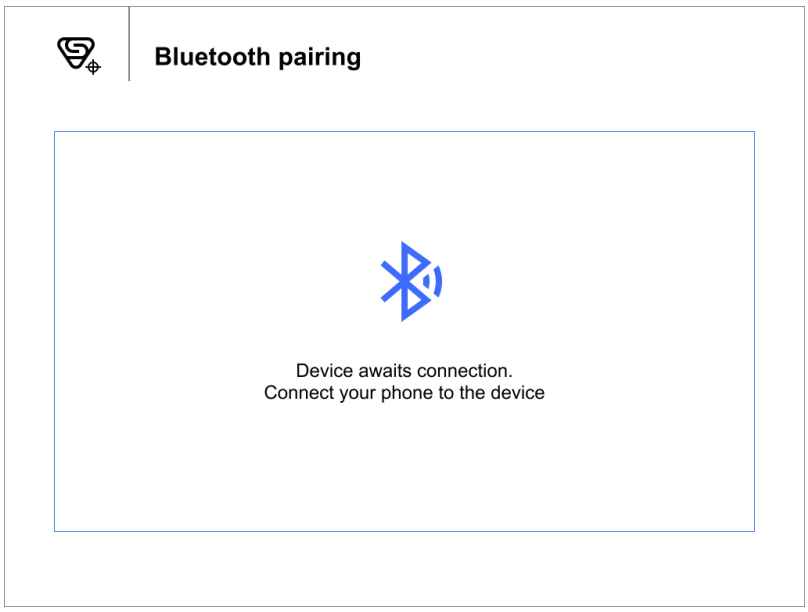

4. Turn on Bluetooth on your smartphone.

5. Connect your smartphone to the device using the **Stream Vision Ballistics** App (Devices tab → Connect Device button).

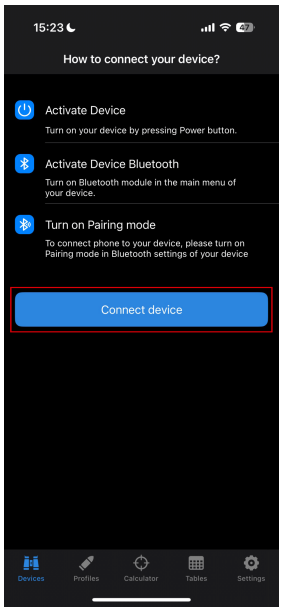

6. Click “Connect” next to your device.

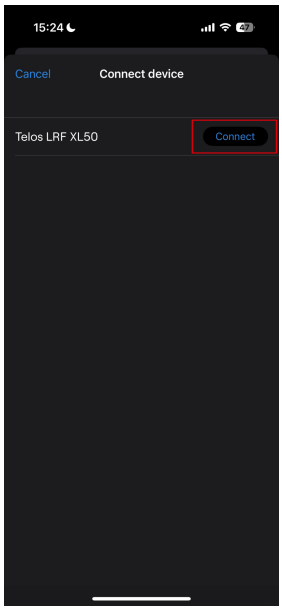

7. Enter the code from the device screen in the Stream Vision Ballistics App and tap "Connect".

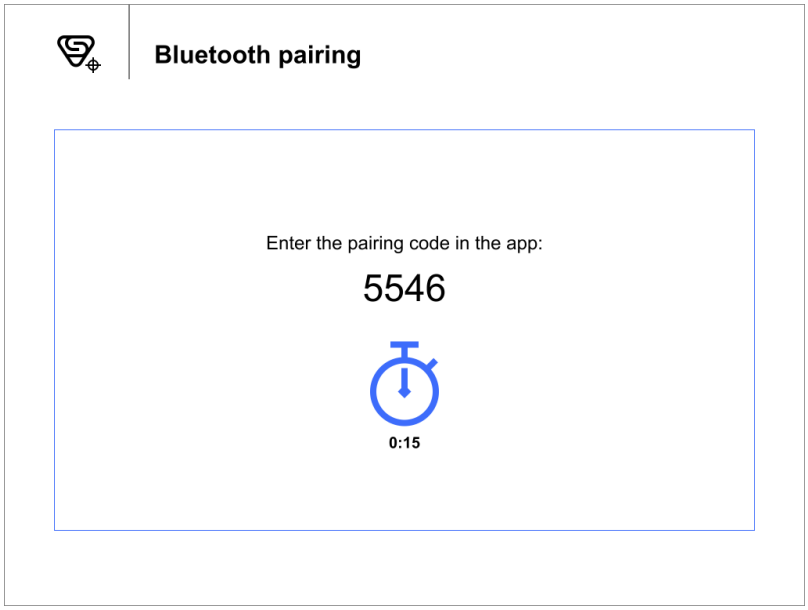

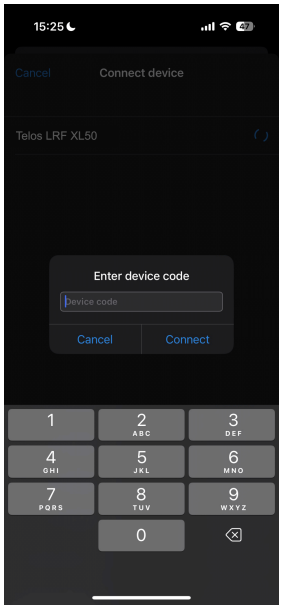

8. The blue Bluetooth icon next to the device means that the device is connected.

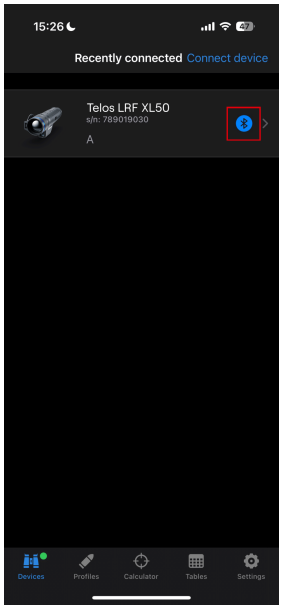

Wi-Fi Settings

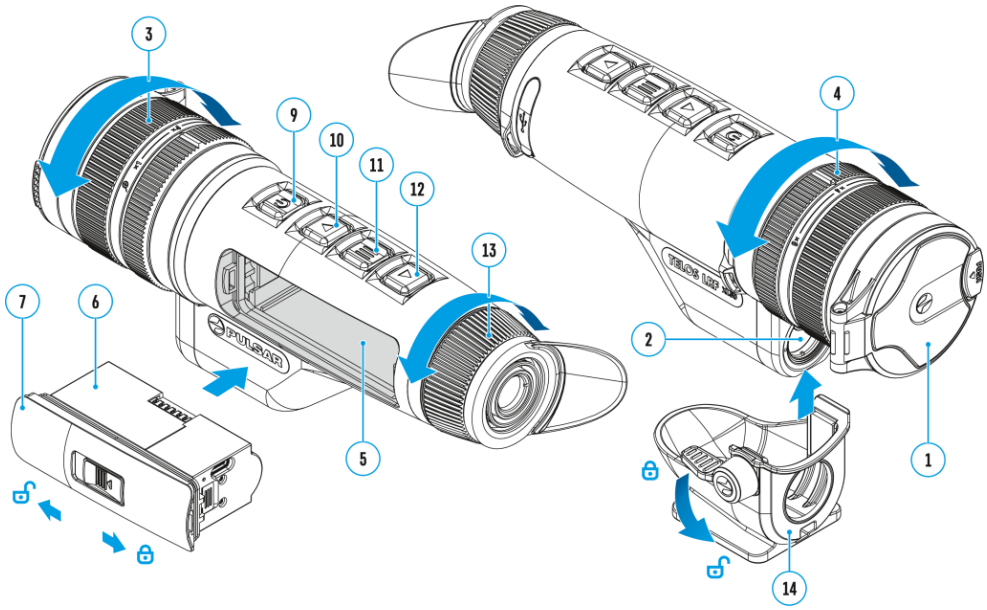

This item enables you to set up your device for operation in a Wi-Fi network.

1. Press and hold the **MENU (11)** button to enter the main menu.
2. Use the **UP (10)/DOWN (12)** buttons to select the **Wi-Fi Settings** icon.
3. Press the **MENU (11)** button briefly to enter the submenu.

Wi-Fi Activation

Turning Wi-Fi on/off

1. Use the **UP (10)/DOWN (12)** buttons to select the **Wi-Fi Activation** icon.
2. Press the **MENU (11)** button briefly to turn Wi-Fi on/off.

Password Setup

This function enables you to set a password to access the scope from an external device. The password is used to connect an external device (i.e. smartphone) to your thermal imager.

1. Use the **UP (10)/DOWN (12)** buttons to select the **Password Setup** icon.
2. Press the **MENU (11)** button briefly to enter the submenu.
3. The unique password only for your device will appear on the image.
4. Use the **UP (10)/DOWN (12)** buttons to set the desired password using the **UP (10)** button to increase and the **DOWN (12)** button to decrease the values.
5. Press the **MENU (11)** button to toggle between the digits.
6. Press and hold the **MENU (11)** button to save your password and exit the submenu.

Access Level Setup

This option allows you to configure the appropriate access level to your device made available to the Stream Vision 2 application.

- **Owner** level**.** A Stream Vision 2 user has full access to all device functions.
- **Guest** level**.** A Stream Vision 2 user only has access to the real time video stream from the device.

1. Use the **UP (10)/DOWN (12)** buttons to select the **Access Level Setup** icon.
2. Press the **MENU (11)** button briefly to enter the submenu.
3. Select the access level with the **UP (10)/DOWN (12)** buttons.
4. Press and hold the **MENU (11)** to confirm your selection and exit from the submenu.

Wi-Fi Band

This setting helps to solve smartphone connection issues in the following cases:

- If your smartphone does not support 5 GHz Wi-Fi band, switch to 2.4 GHz.
- Many Wi-Fi networks cause interference. In this case, switching between Wi-Fi bands can improve the connection between the device and the smartphone.

1. Use the **UP (10)/DOWN (12)** buttons to select the **Wi-Fi Band** icon.
2. Press the **MENU (11)** button briefly to enter the submenu.
3. Press the **UP (10)/DOWN (12)** buttons to select the Wi-Fi bandwidth – **5 GHz** or **2.4 GHz**.
4. Confirm your selection with a short press of the controller **MENU (11)** button.

Ballistics

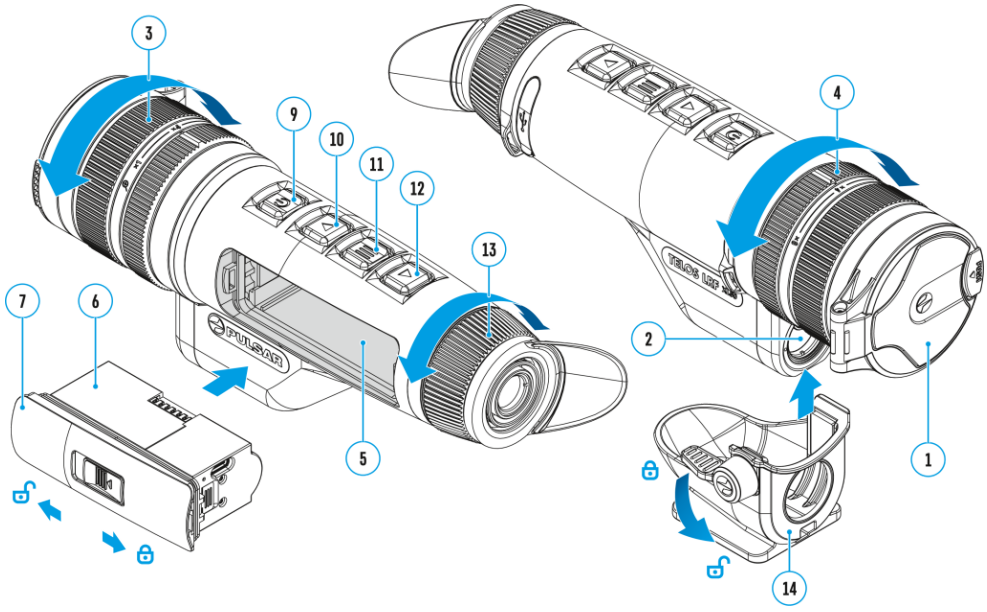

This section contains parameters for the ballistic calculator in the device.

1. Enter the main menu with a long press of the **MENU (11)** button.
2. Use the **UP (10)/DOWN (12)** buttons to select the submenu **Ballistics** .
3. Enter the submenu with a short press of the **MENU (11)** button.
4. Use the **UP (10)/DOWN (12)** buttons to select the desired menu item.

Ballistics Activation

The Ballistic calculator function shows the recommended aiming point and correction values. For more information on using the function, see the section **Ballistic Calculator.**

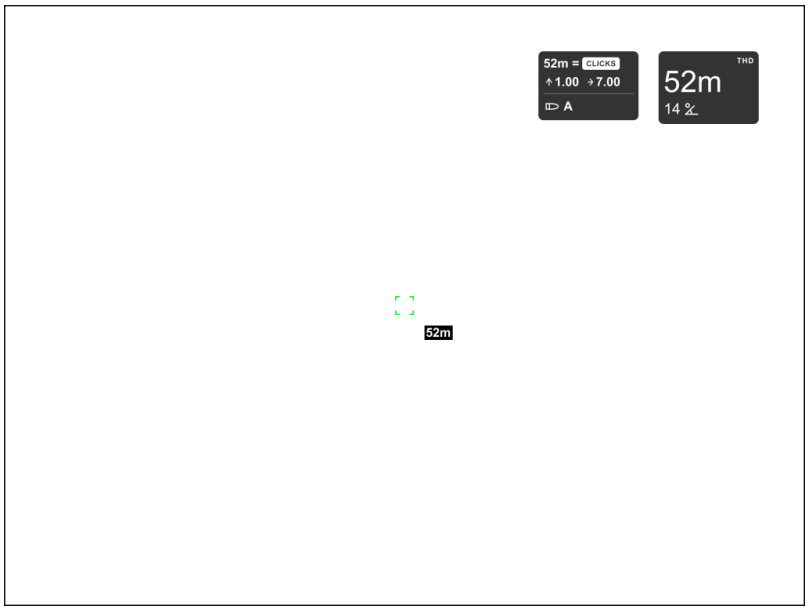

1. Use the **UP (10)/DOWN (12)** buttons to select **Ballistics Activation** .
2. Turn the Ballistic Calculator on/off with a short press of the **MENU (11)** button.

Profile

This item allows you to select one of five profiles (A, B, C, D, E) to use in the ballistics calculator.

1. Use the **UP (10)/DOWN (12)** buttons to select **Profile** .
2. Enter the submenu with a short press of the **MENU (11)**.
3. Use the **UP (10)/DOWN (12)** buttons to select one of the profiles (marked with the letters A, B, C, D, E).
4. Confirm your selection with a short press of the **MENU (11)**.

Ballistic Calculator Units

In this item, you can change or disable the units for the ballistic calculator corrections.

1. Use the **UP (10)/DOWN (12)** buttons to select the **Ballistic Calculator Units** menu item.
2. Briefly press the **MENU (11)** button to enter the submenu.
3. Use the **UP (10)/DOWN (12)** buttons to select one of the three units (MOA, MRAD, Click) or Off to disable the units.
4. Confirm your selection with a brief press of the **MENU (11)** button.

Rangefinder

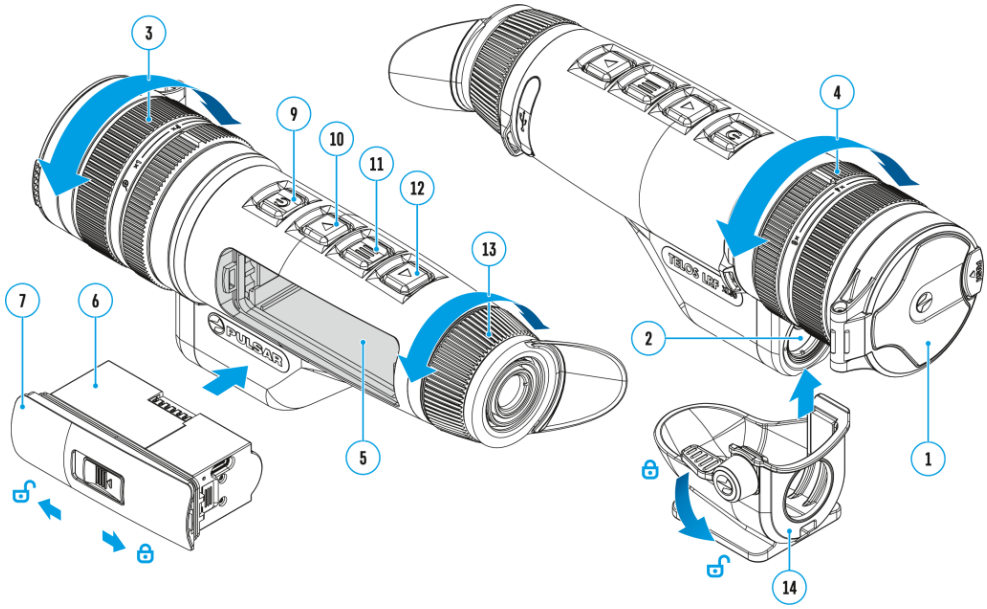

Menu item Rangefinder contains settings for the built-in laser rangefinder.

1. Press and hold the **MENU (11)** button to enter the main menu.
2. Select the submenu **Rangefinder** LRF with the **UP (10)/DOWN (12)** buttons.
3. Press the **MENU (11)** button briefly to enter the submenu.

Reticle Type

1. Press the **MENU (11)** button briefly to enter the **Reticle Type** submenu.
2. Select one of the three reticle shapes with the **UP (10)/DOWN (12)** buttons.
3. Confirm selection with a brief press of the **MENU (11)** button.

TPA

This feature allows you to determine the target position angle. When the function is activated the angle is constantly displayed in the upper right corner of the display.

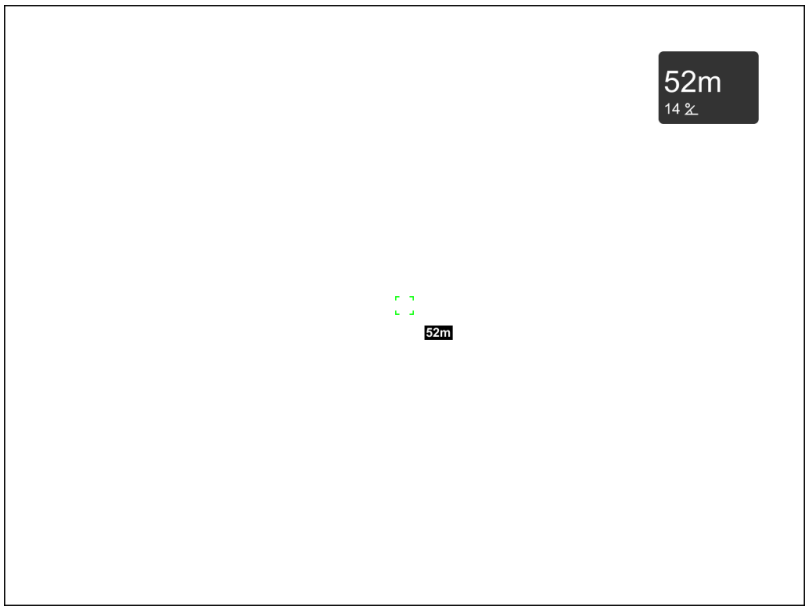

1. Select **TPA** with the **UP (10)/DOWN (12)** buttons.
2. Turn **TPA** on/off with a short press of the **MENU (11)** button.

THD

"THD" (True Horizontal Distance) function allows you to measure true horizontal distance to a target based on the angle of elevation value.

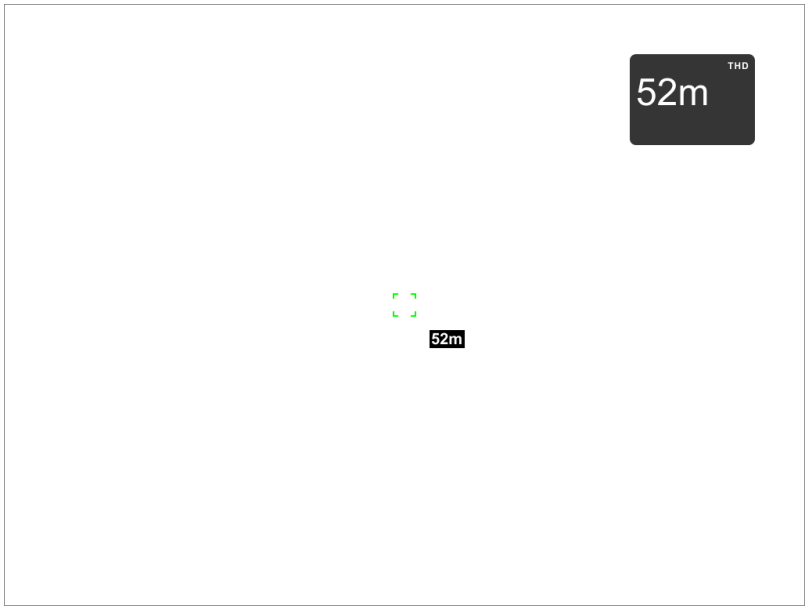

1. Select **THD** with the **UP (10)/DOWN (12)** buttons.
2. Turn THD on/off with a short press of the **MENU (11)** button.
3. Hereinafter the message *THD* will appear above the distance readings.

General Settings

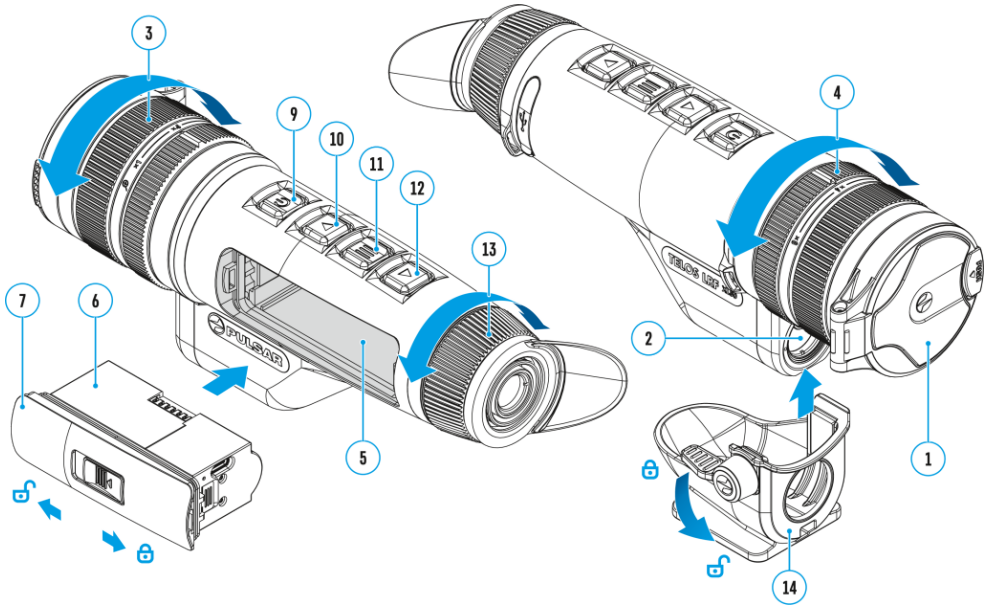

This menu section allows you to change the interface language, set the date, time, units of measure, return the device to factory default settings and perform memory card formatting.

1. Press and hold the **MENU (11)** button to enter the main menu.
2. Use the **UP (10)/DOWN (12)** buttons to select the **General Settings** icon.
3. Press the **MENU (11)** button briefly to enter the submenu.
4. Choose the required menu item with **UP (10)/DOWN (12)** buttons.

Language

Language selection

1. Press the **MENU (11)** button briefly to enter the **Language** menu item.
2. Use the **UP (10)/DOWN (12)** buttons to select one of the available interface languages: English, German, Spanish, French, Russian, Italian, Portuguese, Dutch, Danish, Norwegian, Swedish, Polish, Czech, Hungarian, Bulgarian, Finnish, Lithuanian, Latvian, Ukrainian.
3. Press the **MENU (11)** button briefly to confirm the selection.
4. Press and hold the **MENU (11)** button to save your selection and exit from the submenu.

Date

Date setting

1. Press the **MENU (11)** button briefly to enter the **Date** menu item. The date is displayed in dd/mm/yyyy format.
2. Use the **UP (10)/DOWN (12)** buttons to select the desired year, month, and date. Press the **MENU (11)** button briefly to toggle between digits.
3. Press and hold the **MENU (11)** button to save the date and exit the submenu.

Time

Time setting

1. Press the **MENU (11)** button briefly to enter the **Time** menu item.
2. Select the time format (24-hour clock or AM / PM) by pressing the **UP (10)/DOWN (12).**
3. Press the **MENU (11)** button to select the hours.
4. Press the **UP (10)/DOWN (12)** buttons to select the hour value.
5. Press the **MENU (11)** button to select the minutes.
6. Press the **UP (10)/DOWN (12)** buttons to select the minute value.
7. Press and hold the **MENU (11)** button to save the time and exit the submenu.

Units of Measure

Rangefinder units of measure

1. Press the **MENU (11)** button briefly to enter the **Units of Measure** menu item.
2. Press the **UP (10)/DOWN (12)** buttons to select either Meters or Yards as the unit of measure.
3. Press the **MENU (11)** button briefly to confirm your selection.
4. Exit from the submenu will happen automatically.

Calibration mode

Calibration mode selection.

Calibration enables the device to equalize the microbolometer background temperature and eliminate the image flaws (such as vertical bars, phantom images, etc.).

There are three calibration modes: **Manual, Semi-Automatic** and **Automatic**.

The selected calibration mode is displayed in the status bar (see Status Bar section).

Select the required mode in the Calibration Mode menu item:

1. Use the **UP (10)/DOWN (12)** buttons to select the **Calibration Mode** icon.
2. Press the **MENU (11)** button briefly to enter the submenu.
3. Use the **UP (10)/DOWN (12)** buttons to select one of the calibration modes described below.
4. Press the **MENU (11)** button briefly to confirm the selection.

M mode (Manual)

- Close the lens cover **(1)**.
- Press the **ON/OFF (9)** button briefly.
- Open the lens cover **(1)** after the calibration is completed.

SA mode (Semi-Automatic)

- The user independently determines the need for calibration (according to the image being observed).
- Press the **ON/OFF (9)** button briefly to activate calibration.
- There is no need to close the lens cover because an internal shutter covers the microbolometer automatically.

A mode (Automatic)

- The device is calibrated autonomously according to firmware algorithms.
- There is no need to close the lens cover because an internal shutter covers the microbolometer automatically.
- In this mode, the user can still choose to calibrate the device using the **ON/OFF (9)** button if required (as in the **SA** mode).
- In Automatic calibration mode a countdown timer :05 will appear instead of the calibration mode icon 5 seconds before automatic calibration begins.

Notes:

- During calibration, the image on the display briefly freezes for up to 1 second.
- The selected calibration mode is saved after restarting the device.

Microphone

Turning microphone on/off

This item allows you to enable (or disable) the microphone for recording sound during video recording.

1. Press and hold the **MENU (11)** button to enter the main menu.
2. Use the **UP (10)/DOWN (12)** buttons to select **Microphone** icon.

3. Press the **MENU (11)** button briefly to turn the microphone on/off.

The microphone is off by default.

Video Compression

When set to ON, standard video compression is applied so the video file size is reduced.

When set to OFF, minimal video compression is applied. In this case, the quality of the recorded video is better, but its size is significantly increased.

Warning! Larger video file sizes result in shorter recording times. This may lead to longer download times for video files through the Stream Vision 2 app.

Enable/disable video compression:

1. Select the **Video Compression** menu item with the **UP (10)/DOWN (12)** buttons.
2. To turn on video compression, briefly press the **MENU (11)** button. ON
3. To turn off video compression, briefly press the **MENU (11)** button. OFF

Auto Shutdown Options

When this feature is enabled, the device automatically turns off after 30 minutes of inactivity in Display off mode.

1. Use the **UP (10)/DOWN (12)** buttons to select **Auto Shutdown Options** .
2. Press the **MENU (11)** button to enter the submenu.
3. Press **MENU (11)** button to select *On* for turning on the function **If device inactive for 30 min** or *Off* for turning it off.

Haptic Vibro Indication

This function activates the vibration indication when the device is turned on/off and when buttons are pressed.

1. Press and hold the **MENU (11)** button to enter the main menu.
2. Use the **UP (10)/DOWN (12)** buttons to select the **Haptic Vibro Indication** icon.
3. Press the **MENU (11)** button briefly to turn the function on/off.

LED indication

Turn on/off the LED indicating the operation of the device.

1. Press and hold the **MENU (11)** button to enter the main menu.
2. Use the **UP (10)/DOWN (12)** buttons to select the **LED indication** icon.
3. Press the **MENU (11)** button briefly to turn the LED indication on/off.

Zoom Boost

The function allows you to choose the maximum value for digital magnification when using the Digital zoom adjustment ring **(4).**

1. Use the **UP (10)/DOWN (12)**buttons to select **Zoom boost** icon.
2. Press the **MENU (11)** button to enter the submenu.
3. Use the **UP (10)/DOWN (12)**buttons to select an option for maximum magnification.
4. Press the **MENU (11)** button briefly to confirm your selection.

Default Settings

Factory reset

1. Press the **MENU (11)** button briefly to enter the **Default Settings** menu item.
2. Use the **UP (10)/DOWN (12)** buttons to select Yes to restore default settings or *No* to cancel.
3. Confirm your selection with a short press of the **MENU (11)**

- If *Yes* is selected, display will show *"Do you want to restore default settings?"* with *Yes* and *No* dialogue options. Select *Yes* to restore the default settings.
- Selecting the *No* option will cancel the reset and exit the submenu.

The following settings will be returned to their defaults before being changed by the user:

- **Video Recorder Mode** – Video
- **Amplification Level** – High
- **Smoothing Filter** – Off
- **User Mode** – Off
- **Calibration Mode** – Automatic
- **Language** – English
- **Microphone** – Off
- **Wi-Fi** – Off (unique password)
- **PiP** – Off

- **Colour Mode** – White Hot
- **Units of Measure** – Meters
- **Video Compression** – Off
- **Wi-Fi Band –** 2.4 GHz
- **Display dimming** – Off
- **Haptic vibro indication** – On
- **LED indication** – On
- **Auto shutdown if device inactive for 30 min** – On
- **Image stabilization** – Off
- **Zoom boost** – base value

Attention! When restoring the factory defaults the date, time and user pixel map are saved.

Format

This function enables you to format the Flash memory card. All files will be deleted.

Formatting should be carried out in case of a memory card error.

Before formatting, make sure you transfer all footage to other media.

1. Press the **MENU (11)** button briefly to enter the **Format** .
2. Use the **UP (10)/DOWN (12)** buttons to select *Yes* to format the memory card or *No* to return to the submenu.
3. Press the **MENU (11)** button briefly to confirm your selection.

- If *"Yes"* is selected, display will show *"Do you want to format memory?"* with *"Yes"* and *"No"* dialogue options. Select *Yes* to format the memory card.
- Selecting the *No* option will cancel the formatting and exit the submenu.

Defective pixel repair

When using the device, defective (dead) pixels may appear on the microbolometer. These are bright or dark points of constant brightness that are visible on the image.

Defective pixels on the microbolometer can increase in size relative to the digital-zoom power.

Telos LRF thermal monoculars allow the user to remove any defective pixels on the display, as well as cancel removal, via the device's firmware.

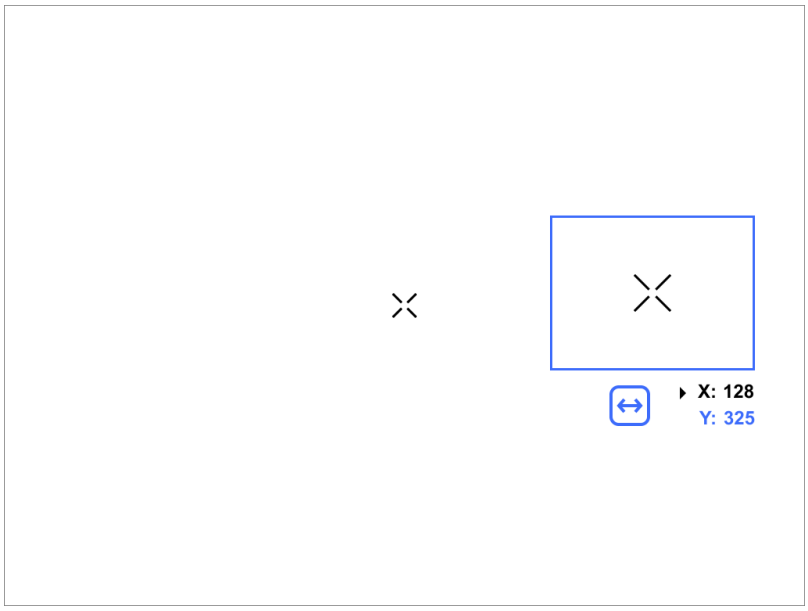

Step 1. Enter the menu to fix the defective pixels

1. Use the **UP (10)/DOWN (12)** buttons to select the **Defective Pixel Repair** menu item.
2. Press briefly the **MENU (11)** to open the submenu.
3. Select the **Defective Pixel Repair** option by briefly pressing the **MENU (11)** button.

Step 2. Select the defective pixel

1. A marker appears in the centre of the display.
2. On the right side of the display appears a "magnifying glass" – a magnified image in the frame with a fixed cross , designed for easier detection of a defective pixel and to match the pixel with the marker, and horizontal and vertical arrows for X and Y axes showing the marker's movement .
3. With a short press of the **UP (10)/DOWN (12)** buttons move the marker to align it with a defective pixel.
4. Switch the direction of the marker from horizontal to vertical and vice versa with a short press of the **MENU (11)** button**.**
5. Align the defective pixel with the fixed cross in the frame – the pixel should disappear.

Step 3. Remove the defective pixel

1. Delete the defective pixel with a short press of the **ON/OFF (9).**
2. Once the pixel has been successfully deleted an *"OK"* message will briefly appear on the screen.
3. You can then delete another defective pixel by moving the marker across the display.
4. Exit the Defective Pixel Repair submenu with a long press of the **MENU (11).**

Warning! The display of a thermal imager may have 1- 2 pixels represented as bright white or coloured (blue, red) dots which cannot be deleted and are not a defect.

Restore default pixel map

This option allows the user to return all previously disabled defective pixels to their original state.

1. Use the **UP (10)/DOWN (12)** buttons to select the **Defective Pixel Repair** icon.
2. Press the **MENU (11)** button to enter the submenu.
3. Use the **UP (10)/DOWN (12)** buttons to select the **Restore Default Pixel Map** icon.
4. Activate the function by briefly pressing the **MENU (11)**.

5. Using the **UP (10)/DOWN (12)** buttons, select *Yes* if you want to return to the factory pixel map and select *No* if you do not.
6. Confirm your selection with a short press of the **MENU (11)**.

Device Information

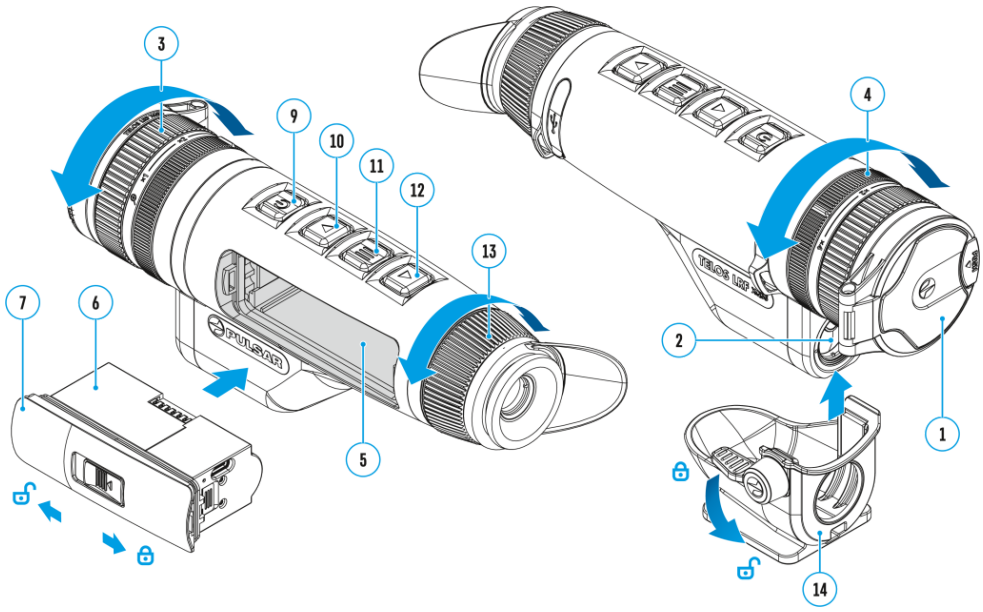

This menu item allows the user to view the following information about the device:

- SKU Number

- Firmware Version
- Device Name
- Hardware Version
- Device Serial Number
- Service Information

To display information, do the following:

1. Press and hold the **MENU (11)** button to enter the main menu.
2. Use the **UP (10)/DOWN (12)** buttons to select the **Device Information** ⓘ icon.
3. Press the **MENU (11)** button briefly to view/exit the information.

Functions

Ballistics calculator

1. Install the Stream Vision Ballistics app from **Google Play** or **AppStore**.

2. Go to Profiles tab.

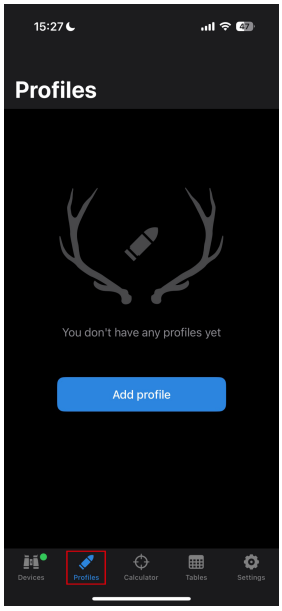

3. Create a profile for your riflescope, ammunition and zeroing distance. Make sure that “Ballistic parameters” switch is on. If your ammo is not on the list, you can enter its parameters manually. The more parameters you specify, the more accurate the recommended point of aiming will be.

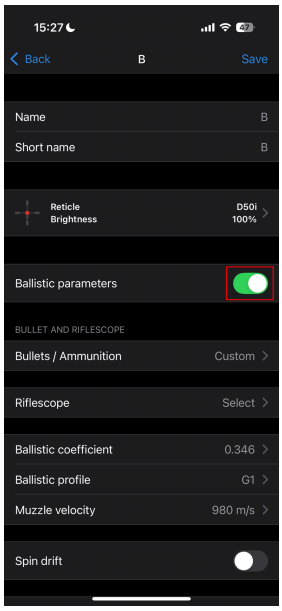

If you select a riflescope model, you will be able to display the correction values in clicks.

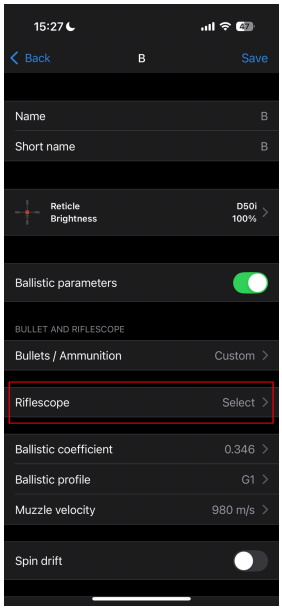

4. Adjust the temperature, pressure and humidity of the environment while zeroing your riflescope.

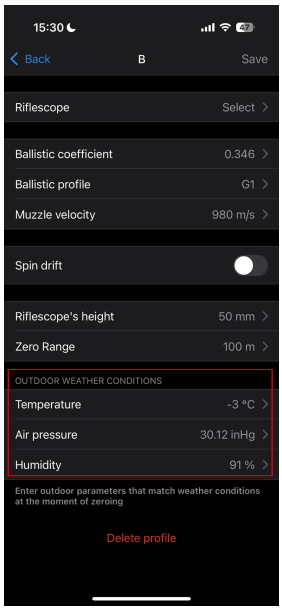

5. Enter a profile name and click save.

6. Connect your device to your smartphone using Bluetooth. First, make sure that your device has the latest firmware version 3.0 or higher installed.

7. Load the profile into the device.

To do this, go to the “Devices” tab ⟶ Select your device ⟶ “All device profiles” → click on the profile you want to replace and select the created profile from the list.

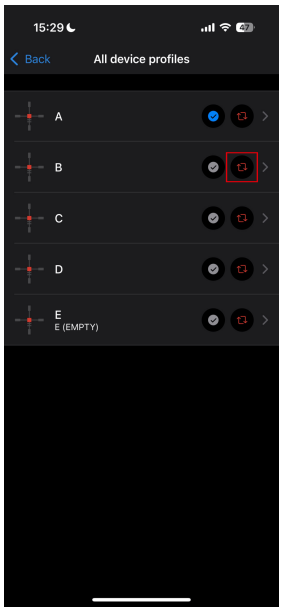

8. Set the status to “Active” for the ballistic profile. To do this, click on the button next to the desired profile, or select it in the profile selection menu in the device.

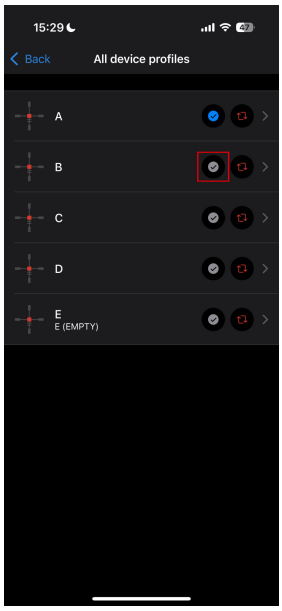

9. Make sure that the **Ballistics activation** option is enabled in the device's **Ballistics** menu.

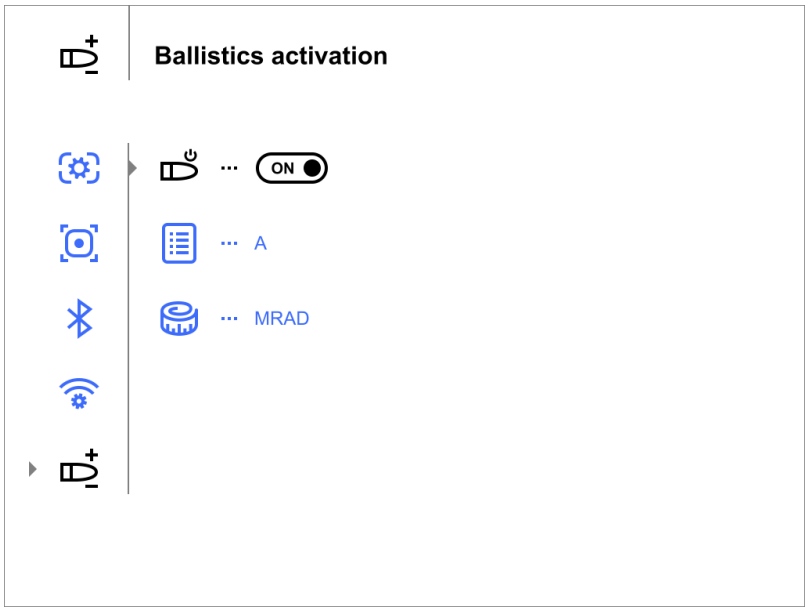

10. Check the accuracy of your profile settings with a test shot at the shooting range.

Note: profiles for different types of ammunition must be zeroed separately.

12. To activate the use of weather data in your geolocation during the shot, go to the "Devices" tab → Select your device → "Outdoor".

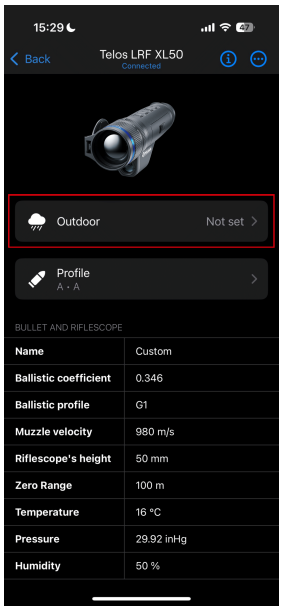

In the **Ballistics** section of the main menu, you can configure the following settings of the ballistic calculator:

- Turn on/off the ballistic calculator
- Select a ballistic profile
- Choose correction units

13. Now when you measure distance with the rangefinder, a ballistic calculator widget will appear on the display with correction values in the selected units.

This function is most useful when used with optical scopes. You can set the corrections by rotating the (windage/elevation) turrets for aiming.

Also, if your riflescope uses a Mil Dot reticle, you can shift it during aiming by the values of these corrections.

Pulsar riflescopes (Thermion 2 Pro/Duo/XG, Thermion 2 LRF, Talion, Digex C50) already have a built-in manual ballistic calculator. Therefore, there will be enough to measure the distance with Telos LRF and set it in the quick menu of the riflescope for the ballistic profile, having previously loaded it into the riflescope via SV Ballistics application.

Stream Vision Ballistics Manual

Android

iOS

Laser Rangefinder

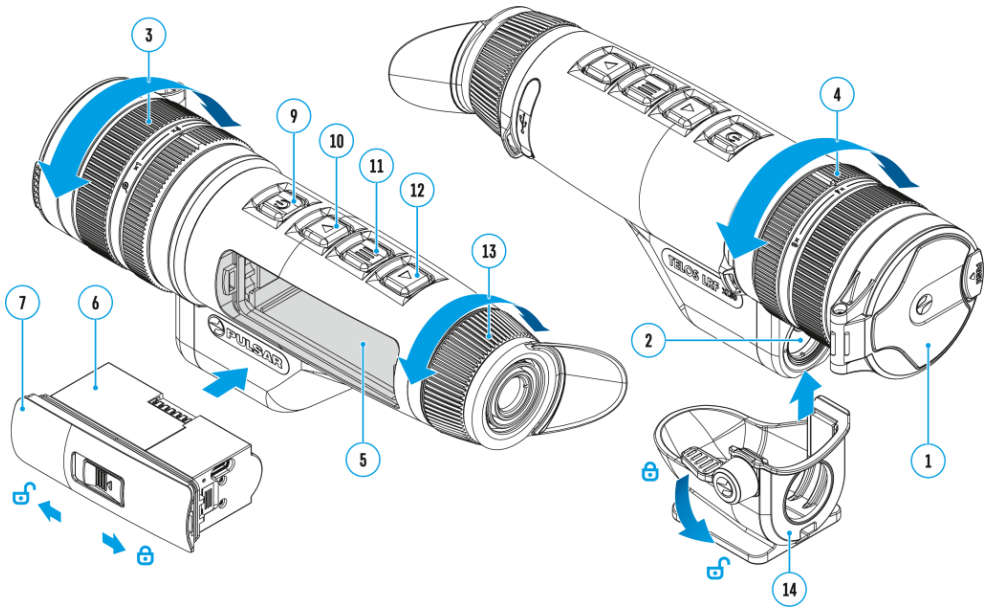

The **Telos LRF** thermal imager is equipped with an integrated laser rangefinder.

Single Measurement Mode

1. Press the **ON/OFF (9)** button briefly to power the device on.

2. Activate the rangefinder by pressing the **DOWN/LRF (12)** button briefly. The rangefinder reticle appears on the display.

3. Place the rangefinder's reticle on the target. Press the **DOWN/LRF (12)** button briefly to measure the distance to the object once.

4. The measurement results are displayed in the upper right corner.

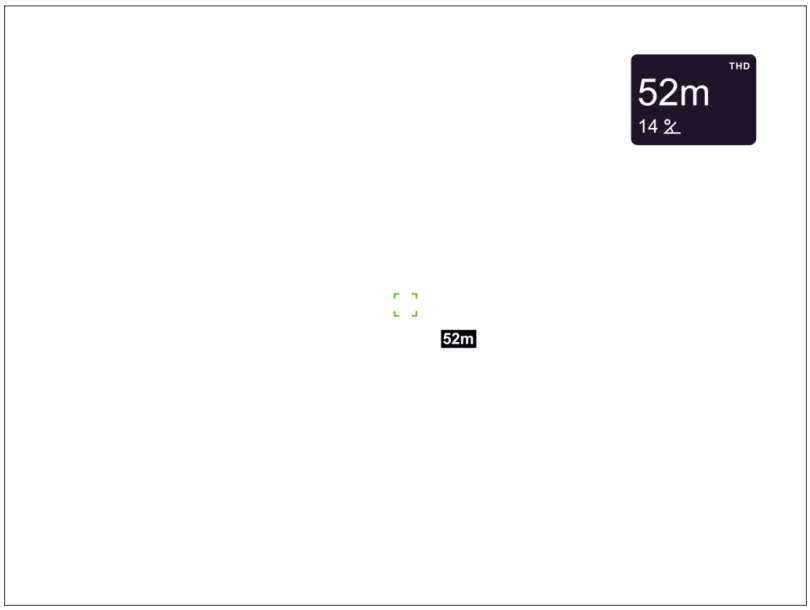

5. The rangefinder shuts down after 3 seconds of inactivity.

Scan Mode

1. Press the **ON/OFF (9)** button briefly to power the device on.

2. Activate the rangefinder by pressing the **DOWN/LRF (12)** button briefly. The rangefinder reticle appears on the display.

3. Activate the scan mode by long pressing the **DOWN/LRF (12)** button to continuously measure the distance to objects.

4. The measurement results are displayed in the upper right corner.

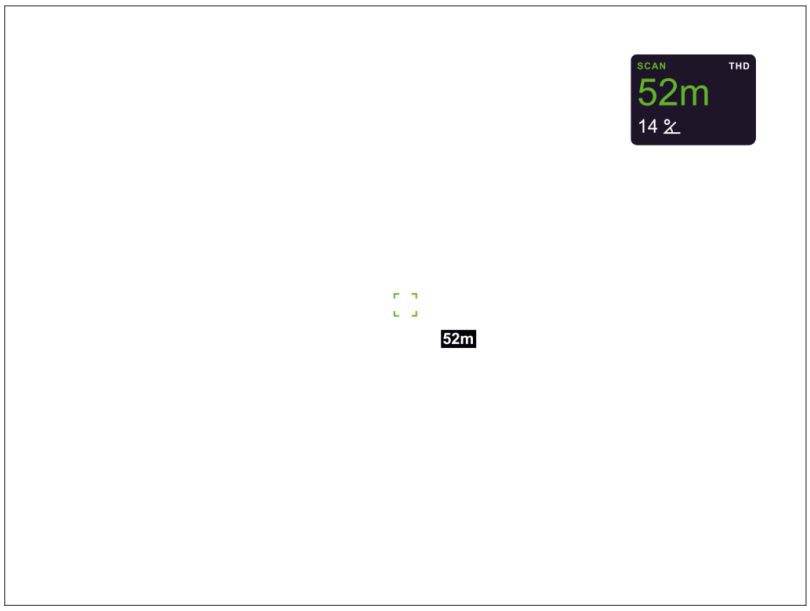

5. Deactivate the rangefinder by long pressing the **DOWN/LRF (12).**

Notes:

- Additional rangefinder settings are available in the **Rangefinder** section of the main menu.
- To select a unit of measurement (meters or yards) go to **Units of Measure** subsection of the **General Settings** section.

Additional Information:

- The accuracy and distance of the measurement depends on the reflection coefficient of the object surface and weather conditions. The reflection coefficient depends on the texture, colour, size and shape of the object. Generally, lighter coloured objects and those with a shiny surface will have a higher reflection coefficient.
- Measurement accuracy can be influenced by the light conditions, fog, haze, rain, snow, etc. The results may be less accurate when operating in sunny weather or if the rangefinder is directed towards the sun.
- It is easier and more reliable to measure the distance to large objects than to small ones.

Video Recording and Photography

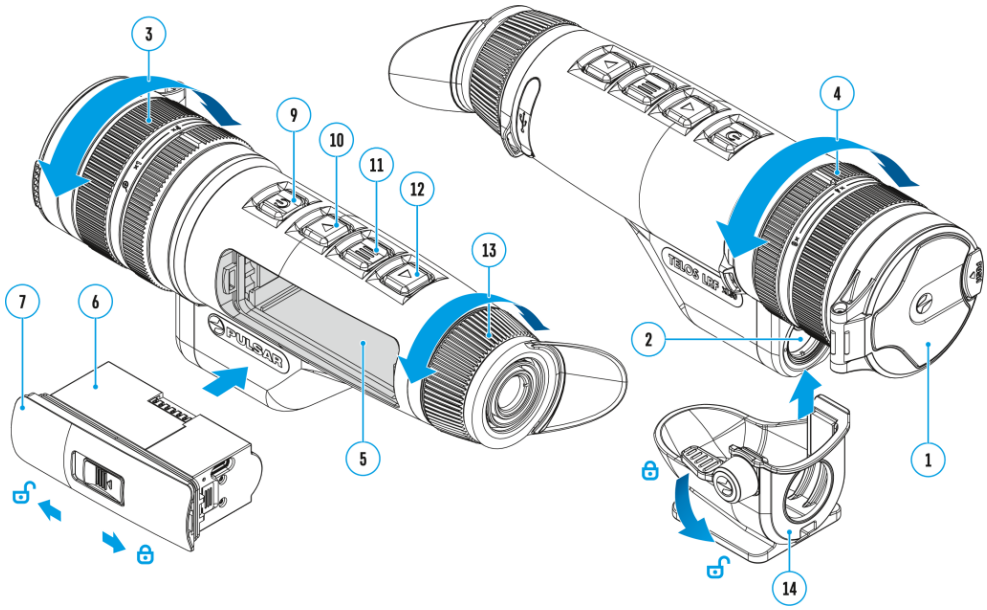

Telos LRF thermal imagers are capable of video recording and photography. Videos and images are saved on the built-in memory card.

Before using this feature please set the **date** and **time** (see General Settings section).

For information on how to watch recorded photos and videos, see the Stream Vision 2 user manual: Android, iOS

The built-in recorder operates in two modes **– Video** and **Photo.**

Video mode. Video recording

1. Switch to **Video** mode by pressing and holding the **UP/REC (10)** button.

2. The icon and the remaining recording time in HH:MM (Hours:Minutes) format are displayed in the upper left corner, for example 4:20.

3. Press the **UP/REC (10)** button briefly to start video recording.

4. When the video recording starts, the icon will disappear, instead of it an icon with a timer in the MM:SS (minutes:seconds) format will appear **0:03**.

5. Pause and resume recording video with a short press of the **UP/REC (10)** button.

6. Stop recording video with a long press of the **UP/REC (10)** button.

7. Video files are saved to the built-in memory card after the video recording has been stopped.

8. Press and hold the **UP/REC (10)** button to switch between the **Video** and **Photo** modes (Video→ Photo→ Video...).

Photo Mode. Capturing an image

1. Switch to the **Photo** mode by pressing and holding the **UP/REC (10)** button.

2. Press the **UP/REC (10)** button briefly to take a photo. The icon flashes – the photo file is being saved to the built-in SD card.

Notes:

- You can enter and operate the menu during video recording.

- Recorded videos and photos are saved to the internal memory card in the format img_xxx.jpg (photos), video_xxx.mp4 (videos).
- Videos are recorded in clips with a maximum duration of 5 minutes. The number of recorded files is limited by the capacity of unit's internal memory and video compression ratio.
- Regularly check the free capacity of the internal memory and move recorded footage to other storage media to free up space on the internal memory card.
- In case of a memory card error, you can use the format function in the General Settings section of the main menu.
- When the Display Off function is activated, video recording continues to run in the background.

Digital Zoom

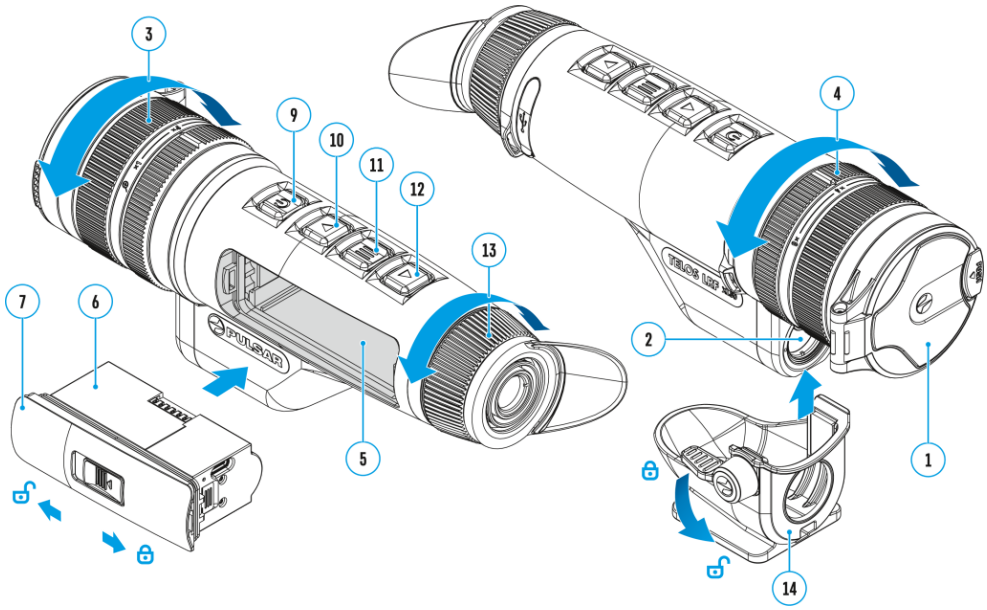

The functionality of the device makes it possible to smoothly increase the base magnification of the device using the adjustment ring **(4)**, as well as return to the base magnification.

You can select the maximum magnification in the item **Zoom Boost** of the General settings menu.

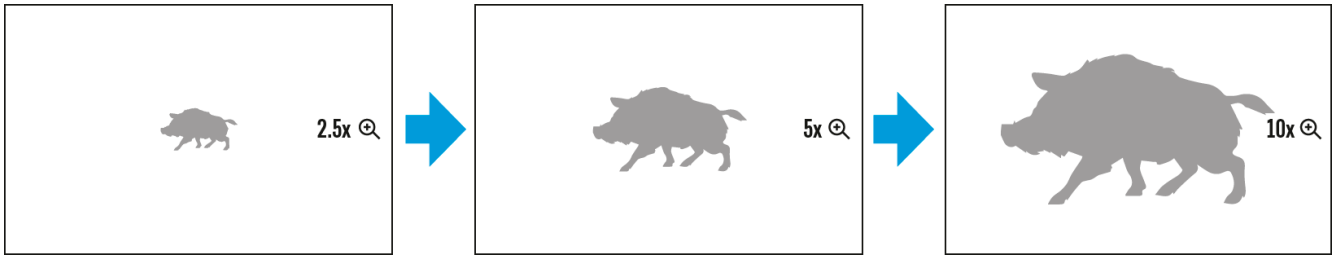

- To increase the digital zoom, turn the adjustment ring **(4)** clockwise.
- To decrease the digital zoom, turn the adjustment ring **(4)** counterclockwise.

PiP Function

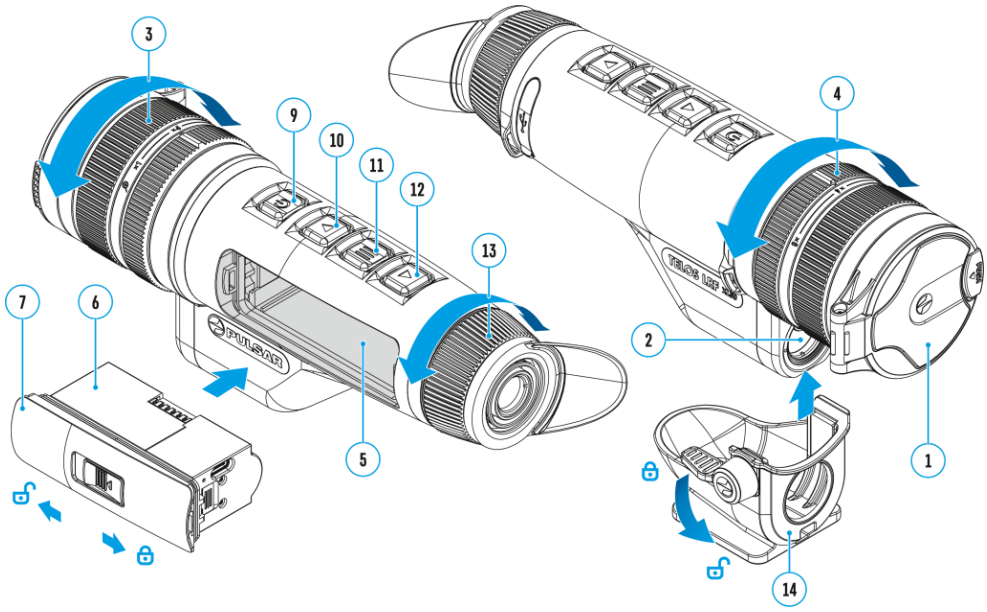

The **PiP** (Picture-in-Picture) function allows you to see both the main image and a magnified image in a dedicated window.

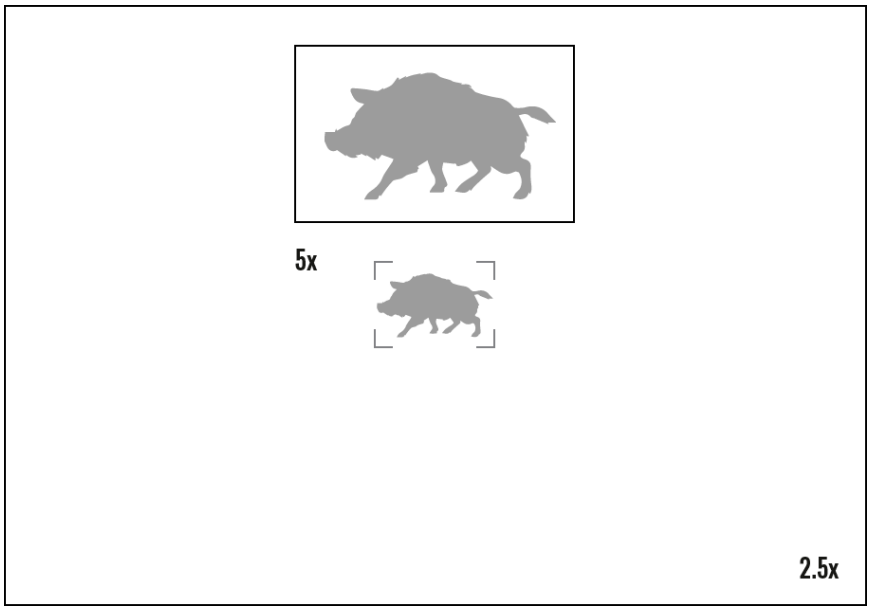

- To turn on and off the **PiP** function see the PiP Mode section.
- Rotate the adjustment ring **(4)** to change the magnification ratio in the **PiP**
- The zoomed image is displayed in a dedicated window, while the image in the rest of the screen is displayed at base magnification.
- When the **PiP** is turned on you can control both the discrete and smooth digital zoom. In this case the zoom value changes only take place in the dedicated window.
- When the **PiP** function is turned off, the screen will display at the magnification that was set in **PiP** mode.

Display-Off Function

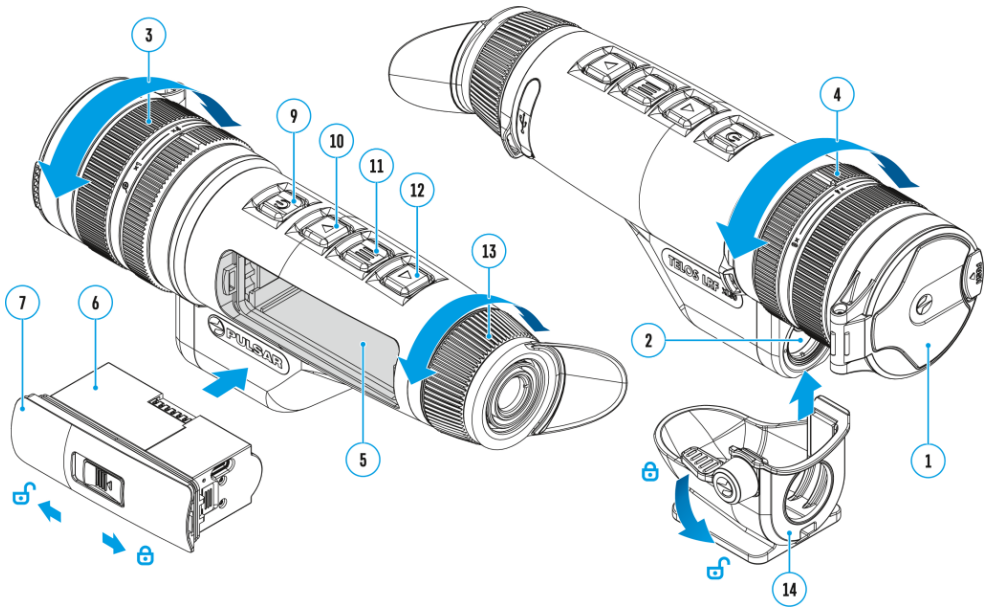

This function darkens the screen, which aids the user's concealment. However, the device stays on.

When this function is in use, the device switches to the standby mode, which allows it to be switched on instantly.

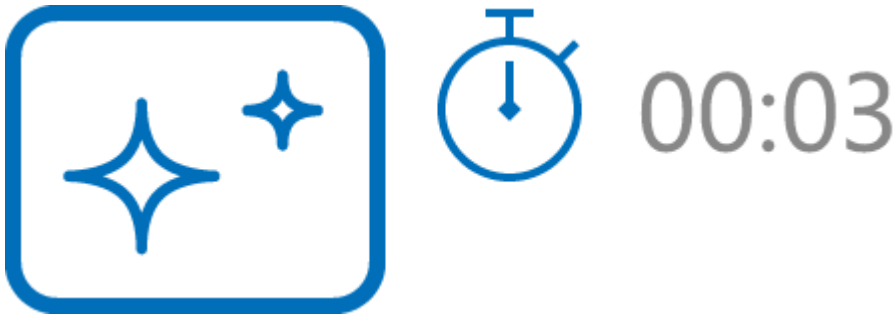

1. When the device is on, press and hold the **ON/OFF (9)** button. The display will turn off, the current time and the **"Display off"** icon will appear.
2. Turn the display back on with a short press of the **ON/OFF (9)** button.
3. When you press and hold the **ON/OFF (9)** button, the display shows the **"Display off"** icon with a countdown. Pressing & holding the button down for the duration of the countdown will power the device off completely.

Wi-Fi Function

The device has a function enabling wireless communication with external devices (smartphone or tablet) via Wi-Fi.

- Turn on the wireless module in the **Wi-Fi Activation** menu option.

Wi-Fi is displayed in the status bar as follows:

Indication on the status bar	Connection Status
	Wi-Fi is switched off
	Wi-Fi connection is in progress
	Wi-Fi is switched on, no connection with device
	Wi-Fi is switched on, device connected

- The device is recognized by an external device as TELOS_XXXX where XXXX are the four last digits of the serial number.
- After entering the password on a mobile device (see **Password Setup** subsection of the **Wi-Fi Settings** section for more information on setting a password) and setting up a connection, the icon in the status bar will change to .
- The Wi-Fi function will turn off automatically if there is not enough battery power for Wi-Fi. To use the Wi-Fi function again, you need to charge the battery.

Installing the Device on a Tripod

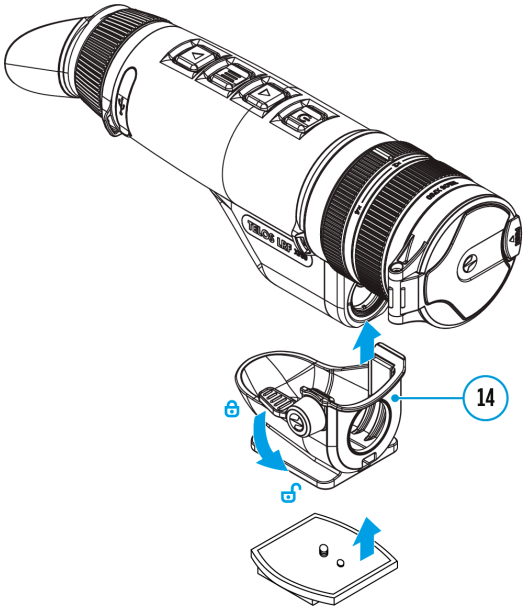

1. Screw the tripod adapter **(14)** (purchased separately) onto the tripod mounting plate until it stops.
2. Attach the mounting plate to the tripod.
3. Install the Telos LRF device into the tripod adapter **(14)** so that the rangefinder lens aligns with the hole on the front of the tripod adapter **(14)**.
4. Turn the handle of the tripod adapter **(14)** to position .
5. Level the Telos LRF horizontally and vertically using the tripod mounting plate.

Notes:

- The tripod adapter is not designed to be mounted on a vehicle.

- When adapter is installed, the user can move the rear part of the device up.
- When the adapter knob is moved to the closed position 🔒, the horizontal direction of the device may shift slightly.

USB Connection

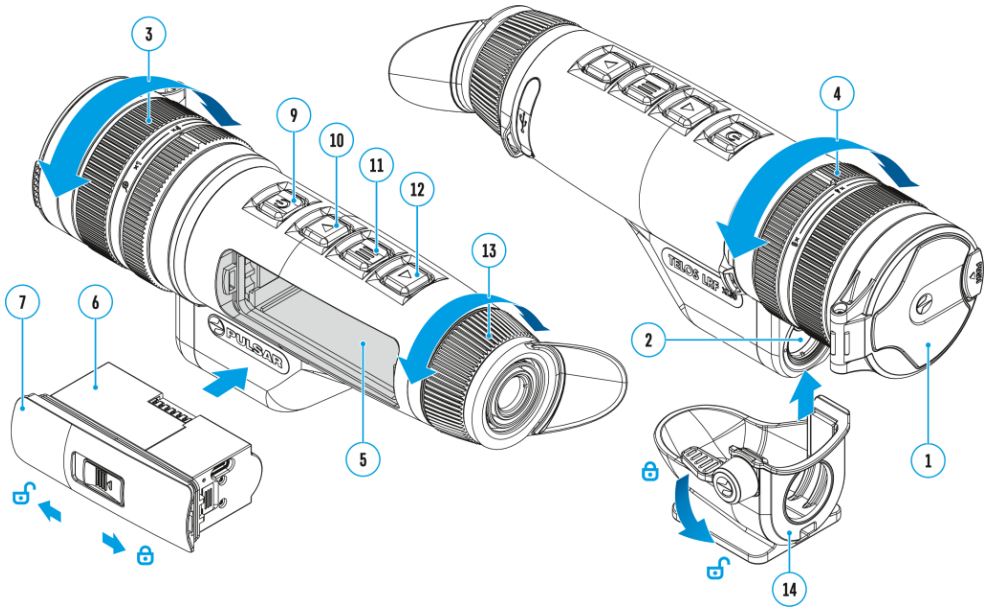

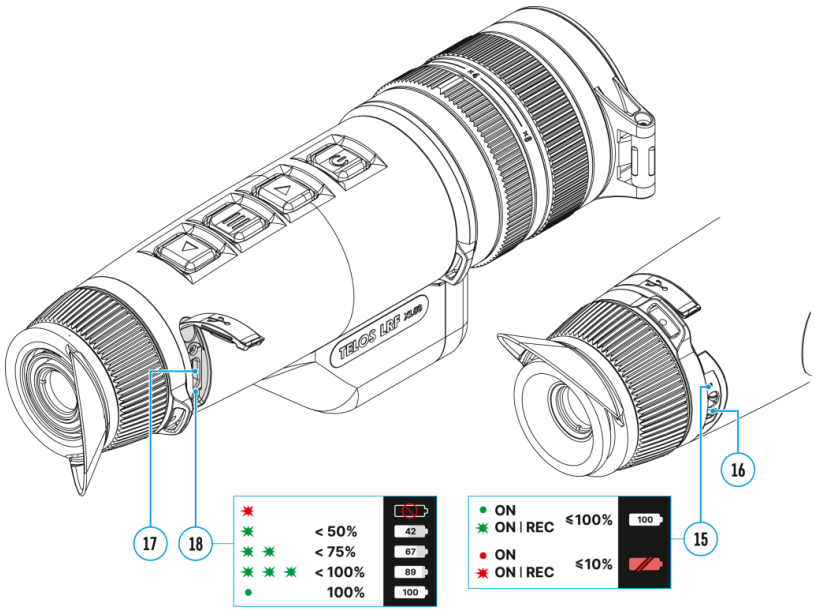

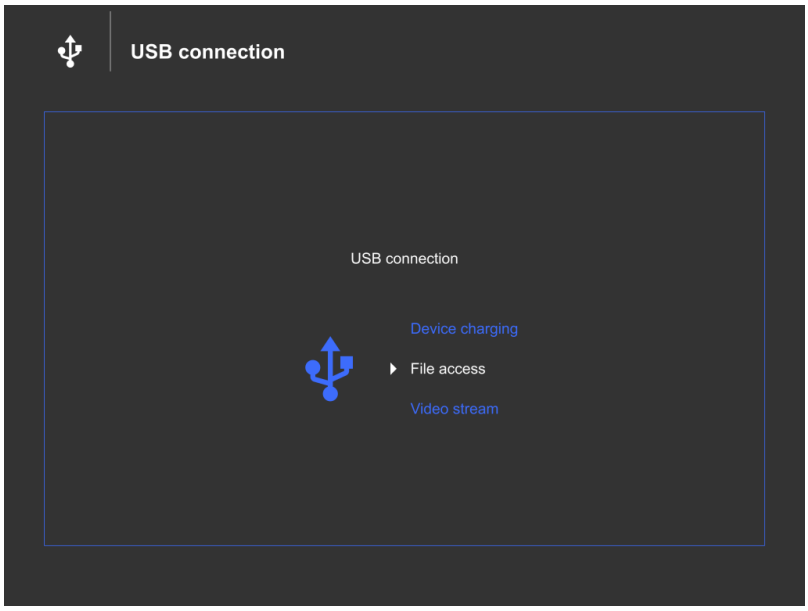

1. Connect one end of the USB cable to the USB Type-C port **(17)** of your device and the other end to the USB port of your PC / laptop using a USB Type-A adapter.
2. Turn the device on with a short press of the **ON/OFF (9)** button (a device that has been turned off cannot be detected by your computer).
3. Your device will be detected by the computer automatically; no drivers need to be installed.
4. Three connection modes will appear on the display: **Device charging, File access** (external memory) and **Video stream** (selected by default and activated automatically after 10 seconds).
5. Select the connection mode with the **UP (10)/DOWN (12)** buttons.
6. Confirm the selection with a short press of the **MENU (11)** button.

Device charging

- In this mode, a PC/laptop is used as an external power supply. The status bar shows the icon 100. The device continues operating and all functions are available.
- Battery recharge feasibility depends on your computer's USB port.
- When the USB is disconnected from the device when in the **Device charging** mode, the device keeps operating with the Battery Pack if it is available and sufficiently charged.

File access

- In this mode the device is detected by the computer as a flash card. This mode is designed for work with the files saved in the device's memory. The device's functions are not available in this mode; the device turns off automatically.
- If video recording was in progress when the connection was made, recording stops and the video is saved.

- If the device is in **File access** mode and is disconnected from USB, the device will remain on.

Video stream

The device can be connected to PC or smartphone via USB Type-C cable.

The device is recognized as a web camera and accessed via any app that can work with web cameras. Signal from USB has better quality and latency and can be recorded or edited with software on the connected device.

During the video stream it is possible to record the observed picture. Activation of video recording is only available from the device itself by briefly pressing the **REC (10)** button.

NOTE! Feature is supported only with iPhones that have USB Type-C port.

To view the video stream, use any application (on desktop or mobile platforms) that supports the UVC video standard.

Image transfer latency may occur in some applications. To reduce latency, disable the buffer in the application settings.

Software

Stream Vision 2

Install the Stream Vision 2 application to download files, update firmware, control the device by remote control and broadcast images from your device to a smartphone or a tablet via WiFi.

We recommend using the latest version – Stream Vision 2.

Mobile App
STREAM VISION 2

You can find further guidelines on Stream Vision 2 here.

Download from Google Play

Download from App Store

Find answers to frequently asked questions about using Stream Vision 2 **here**.

Stream Vision 2 Manual

Android

iOS

Firmware Update

1. Download the free Stream Vision 2 App in Google Play or App Store**.**
2. Connect your Pulsar device to your mobile device (smartphone or tablet).
3. Launch Stream Vision 2 and go to section “Settings”.
4. Select your Pulsar device and press “Check firmware update”.
5. Wait for the update to download and install. Pulsar device will reboot and will be ready to operate.

Important:

- if your Pulsar device is connected to a phone or mobile device, please turn on mobile data transfer (GPRS/3G/4G) to download update;
- if your Pulsar device is not connected to your phone or mobile device but is already listed in “Settings” > “My devices” section, you may use Wi-Fi to download update.

Find answers to frequently asked questions about using Stream Vision 2 here.

Is your firmware up to date?

Click here to check the latest firmware for your device.

Maintenance

Technical Inspection

It is recommended to inspect your device before each use. Check the following:

- The device should be free of any cracks or deformations.
- The lenses should be free of cracks, grease, dirt or debris.
- The battery level of the device should be full. Electrical sockets should be free of salts, oxidation, or other debris.
- All controls should be responsive.

Technical Maintenance and Storage

Maintenance should be carried out at least twice a year and should include the following steps:

- Wipe the exterior surfaces of metal and plastic parts with a cotton cloth. Do not use chemically active substances, solvents, etc. as these will damage the paint.
- Clean the electrical contacts of the rechargeable battery on the device using a non-greasy organic solvent.
- Check lenses of objective, eyepiece and rangefinder. If necessary, remove dust and sand from the optics (it is preferable to use a non-contact method). Cleaning of the exterior surfaces of the optics should be done with cleaners designed especially for this purpose.
- Store the device in a carrying case. Remove the Battery Pack for long-term storage.
- Avoid getting repellent on the housing of the device. This may damage the appearance of the housing coating.

Troubleshooting

For technical assistance, please submit a request through our Support page.

- **The device does not turn on**

  Possible cause – The battery is completely discharged.

  Solution – Charge the battery.

- **Device malfunction**

  Solution – In case of any malfunctions during operation, try resetting the device by long pressing the ON/OFF button for 10 seconds.

- **The device does not operate from an external power source**

  Possible cause – The USB cable is damaged.

  Solution – Replace the USB cable.

  Possible cause – The external power supply is discharged.

  Solution – Charge the external power supply (if necessary).

- **The image is blurry, with vertical stripes or an uneven background**

  Possible cause – Calibration is required.

  Solution – Perform image calibration according to the Calibration Mode section of the manual.

- **Black screen after calibration**

  Solution – If the image does not clear after calibration, you need to recalibrate.

- **When the device is turned on, the calibration frequency is at first higher, then decreases (if the automatic calibration mode is enabled)**

Possible cause – After turning on the device, it takes some time for the sensor temperature to stabilize. This is normal and is not a defect.

- **Poor quality image. There is noise or ghost images of previous scenes or objects**

  Possible cause – Manual calibration has been performed with the lens cover open.

  Solution – Check the Calibration Mode, close the lens cover and calibrate the device.

- **The image is too dark**

  Possible cause – Brightness or contrast level is too low.

  Solution – Adjust the brightness or contrast level in the Quick Menu.

- **Colour bars appear on the display or the image disappears**

  Possible cause – The device was exposed to static charges during operation.

  Solution – When the exposure to static charges is over, the device may either reboot automatically or require to be switched off and on again.

- **The image of the object being observed is missing**

  Possible cause – The object is behind glass, which obstructs thermal vision.

  Solution – Remove the glass.

- **Poor image quality / Detection range reduced**

  Possible cause – These problems may occur during observation in adverse weather conditions (snow, rain, fog, etc.).

- **The image quality during the device operation at below zero temperatures is worse than at positive temperatures**

  Possible cause – In warm climates, objects in the background of a thermal image heat up differently because of thermal conductivity, generating a high temperature contrast and a sharper thermal image.

  In cold climates, objects in the background of a thermal image will cool down to roughly the same temperature, which leads to a greatly reduced temperature contrast and a degraded image quality. This is normal for all thermal imaging devices.

- **Smartphone or tablet PC cannot be connected to the device**

  Possible cause – Device password has been changed.

Solution – Delete the network and connect again using the password saved in the device.

Possible cause – The device is in an area with too many Wi-Fi networks that may be causing signal interference.

Solution – To ensure a stable Wi-Fi connection, relocate the device to an area with fewer or no Wi-Fi networks.

Possible cause – The device has a 5 GHz network enabled, but the smartphone only supports 2.4 GHz.

Solution – Switch the device's Wi-Fi bandwidth to 2.4 GHz.

More information on solving problems with connection to Stream Vision 2 by following the link.

- **Wi-Fi signal is missing or interrupted**

  Possible cause – Smartphone or tablet is out of range of a strong Wi-Fi signal. There are obstacles between the device and the smartphone or tablet (e.g., concrete walls).

  Solution – Relocate smartphone or tablet into the Wi-Fi signal line of sight.

  More information on solving problems with connection to Stream Vision 2 by following the link.

- **Rangefinder does not measure distance**

  Possible cause – There is an object in front of the receiver or emitter lens preventing signal transmission.

  Solution – Make sure that: the lenses are not blocked by your hand or fingers; the lenses are clean.

  Possible cause – The device is not being held steadily when measuring.

  Solution – Keep the device steady when measuring.

  Possible cause – Distance to the object exceeds 1000 m.

  Solution – Pick an object at a distance not longer than 1000m.

  Possible cause – Low reflection ratio (i.e. leaves of trees).

  Solution – Pick an object with higher reflection ratio (see point Additional Information in section Laser Rangefinder).

- **Large measurement error**

Possible cause – Inclement weather conditions (rain, mist, snow)

Legal Compliances and Disclaimers

Attention! A license is required for Telos Thermal Imager when exporting outside your country.

Electromagnetic compatibility. This product complies with the requirements of European standard EN 55032: 2015, Class A.

Warning! Operation of this equipment in a residential environment could cause radio interference.

Caution – use of controls or adjustments or performance of procedures other than those specified herein may result in hazardous radiation exposure.

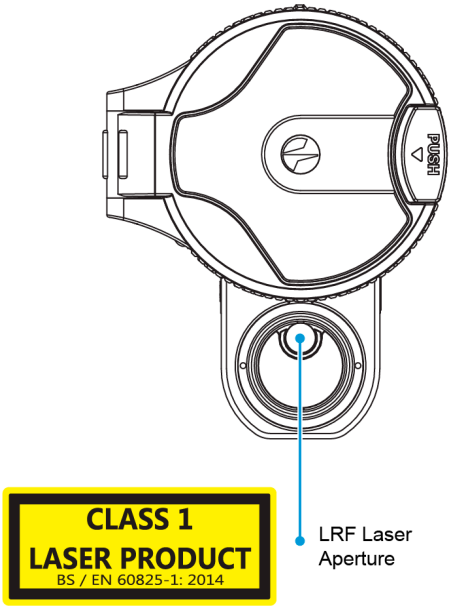

Updates of the Product. The manufacturer reserves the right at any time, without mandatory prior notice to the Customer, to make changes to the package contents (subject to the applicable laws, if any), design and characteristics that do not impair the quality of the Product.

Repair. Repair of the product is available within 5 years after purchase of the product.

Limitation of Liability. Subject to mandatory applicable laws and regulations: manufacturer will not be liable for any claims, actions, suits, proceedings, costs, expenses, damages or liabilities (if any), arising out of the use of this product. Operation and use of the product are the sole responsibility of the Customer. Manufacturer's sole undertaking is limited to providing the product(s) and related services in accordance with the terms and conditions of concluded transactions, including provisions

established in warranty. The provision of products sold and services performed by Manufacturer to the Customer shall not be interpreted, construed, or regarded, either expressly or implied, as being for the benefit of or creating any obligation toward any third party (other than Distributor, Dealer, Buyer). Manufacturer's liability hereunder for damages, regardless of the form or action, shall not exceed the fees or other charges paid to Manufacturer for the product(s) and/or service(s).

MANUFACTURER WILL NOT BE LIABLE FOR LOST REVENUES OR INDIRECT, SPECIAL, INCIDENTAL, CONSEQUENTIAL, EXEMPLARY, OR PUNITIVE DAMAGES, EVEN IF THE MANUFACTURER KNEW OR SHOULD HAVE KNOWN THAT SUCH DAMAGES WERE POSSIBLE AND EVEN IF DIRECT DAMAGES DO NOT SATISFY A REMEDY.