THERMION 2 LRF Manual

Specifications
About the device
- Description
- Package Contents
- Components and Controls
- Features

Power supply
- Precautions
- Recommendations for battery use
- Battery Charging
- Battery Installation
- Switching and Changing the Batteries
- External Power Supply

Getting started
- Mounting on the Rifle
- Powering on and Image Settings
- Button Operation

Zeroing
- How to Zero
- Add New Distance
- Zeroing settings
- Windage/Elevation
- Magnification (when Zeroing)
- Freeze
- Name Distance
- Change Primary Distance
- Delete Distance

Interface
- Status Bar
- Quick Menu
- Main Menu
  - Enter the Main Menu
  - Reticle & Zeroing
    - Zeroing Profile
    - Reticle Type
    - Reticle Colour
    - Reticle Brightness
  - Smoothing Filter
  - Colour Modes

User settings
Display Settings
Bluetooth
Wi-Fi Settings
Microphone
Ballistics
Rangefinder
Calibration Mode
General Settings
Device Information
Functions
Amplification Level
Video Recording and Photography
Laser Rangefinder
Ballistic Calculator
Discrete Digital Zoom
PiP Function
Wi-Fi Function
Scalable Reticles
Display-Off Function
Wireless Remote Control
Descriptions of Controls
Remote Control Activation
USB Connection
Software
Stream Vision 2
Firmware Update
Maintenance
Technical Maintenance
Technical Inspection
Troubleshooting
The device does not turn on
Device malfunction
The device does not operate from an external power source
The image is fuzzy. There are distortions in the form of bars of different widths lying in different directions, or dots of different size and brightness.
Black screen after calibration
The reticle is blurred and cannot be focused with the dioptre ring
Coloured lines appeared on display or image has disappeared
The image is too dark
The reticle is crisp but an object at least 30 m away is blurry
The point of impact shifts after firing rounds
After zeroing, the aiming reticle moves relative to the centre of the display and the rangefinder reticle

The riflescope will not focus
Smartphone or tablet cannot be connected to the device
Wi-Fi signal is missing or interrupted
The image of the object being observed is missing
Poor image quality / Reduced detection distance
There are several light or black dots (pixels) on riflescope's display or microbolometer
When the device is used in low temperature conditions the image quality is worse than in positive temperatures
Rangefinder will not measure distance
Large measurement error
Remote control does not work
When the device is turned on, the calibration frequency is at first higher, then decreases (if the automatic calibration mode is enabled)

Legal Compliances and Disclaimers

Specifications

Model	**LRF XP50 PRO**
SKU	76551
Microbolometer	
Type	uncooled
Resolution, pixels	640×480
Pixel Pitch, µm	17
Sensor NETD, mK	< 25
System NETD, mK	< 18
Frame refresh rate, Hz	50
Optical Specifications	
Lens, mm	F50 F/1.0
Magnification, x	2-16
Eye relief, mm/inch	50/1.96
Field of view (H), °/m@100	12.4/21.8
Diopter adjustment, D	-3/+5
Detection distance (Object of “deer” type), m/y	1800/1970
Aiming Reticle	
Click value, mm@100 m – when magnifying, x	21 mm – 2x 10.5 mm – 4x 5.25 mm – 8x 2.6 mm – 16x

Click range (H/V), mm@100 m	4200/4200
Display	
Type	AMOLED
Resolution, pixels	1024x768
Operating Features	
Diameter of the riflescope body to assemble the mounting rings, mm	30
Power Supply, V	3–4.2
Battery type / Capacity / Rated Output Voltage	Li-Ion Battery Pack APS2 / 2000 mAh / DC 3.7 V (removable) or Li-Ion Battery Pack APS3 / 3200 mAh / DC 3.7 V (removable)* Li-Ion Battery Pack APS5 / 4900 mAh / DC 3.7 V (built-in)
External Power Supply	5 V, 9 V (USB Type-C Power Delivery)
Battery Packs (built-in APS5 and removable APS2) operating time at temp. = 22 °C, hrs**	8.5
Max. recoil power on rifled weapon, Joules	6000
Max. recoil power on smoothbore weapon, caliber	12
Degree of protection IP code (IEC60529)	IPX7
Operating temperature, °C / °F	-25 – +50 / -13 – +122
Dimensions with an eyecup, mm/inch	420×78.5×94.5 / 16.54×3.09×3.72
Weight (without removable battery), kg/oz	0.97 / 34.22
Video Recorder	
Photo / video resolution, pixels	1024×768
Video / photo format	.mp4 / .jpg

Built-in memory	16 GB
Wi-Fi Channel* **	
Frequency	2.4/5 GHz
Standard	IEEE 802.11 b/g/n/ac
Bluetooth	
Wireless Protocol	BLE 4.2
Laser Rangefinder	
Wavelength, nm	905
Max. Measurement Range, m/y****	800 / 874.9
Measurement Accuracy, m	1

* Purchased separately.

** The actual operating time depends on the intensity of using Wi-Fi, video recorder, laser rangefinder.

*** The reception range may vary depending on various factors: obstacles, other Wi-Fi networks.

**** Depends on the characteristics of the object under observation and environmental conditions.

About the device

Description

Thermion 2 LRF Pro thermal imaging riflescopes are designed for use both at night-time and during the day. They provide exceptional image quality even in adverse weather conditions such as fog, smog and rain without being hindered by obstacles like branches, tall grass, dense foliage, or other debris.

Unlike riflescopes based on electrical-to-optical converters, thermal imaging riflescopes do not require an external light source and are resistant to high levels of illumination.

The riflescopes are equipped with a high precision built-in laser rangefinder which allows distance measurement up to 800 meters.

These riflescopes are designed for hunting, target shooting and recreational shooting, observation and orientation.

To get started, see the sections:

Battery Charging

Battery Installation

Mounting on the Rifle

Powering on and Image Setting

How to Zero

Laser Rangefinder

Stream Vision 2

Ballistic Calculator

Package Contents

- Thermal imaging riflescope
- Removable rubber eyecup
- APS2 Battery Pack
- APS battery charger
- Power adapter
- USB Type-C cable with USB Type-A adapter
- Carrying case
- Lens-cleaning cloth
- Quick User Manual
- Warranty card
- APS3 battery cover

Components and Controls

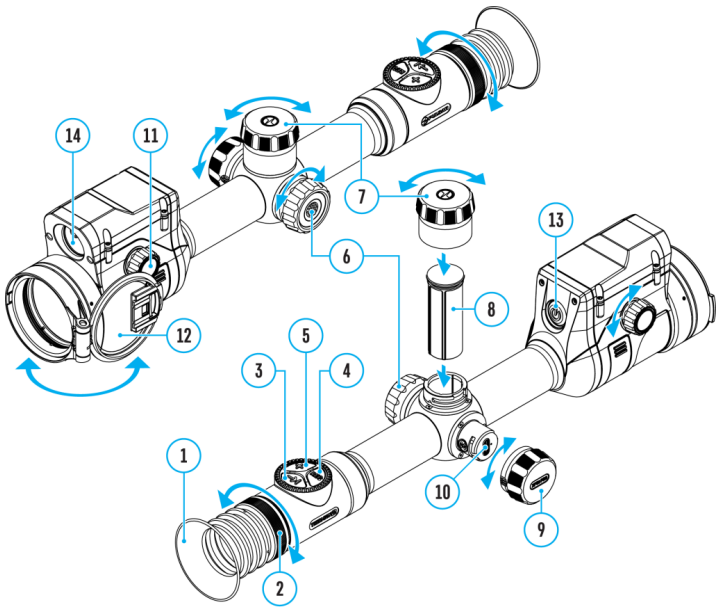

1. Eyecup

2. Eyepiece diopter adjustment ring
3. LRF button
4. REC button
5. ZOOM button
6. Controller
7. Battery compartment cover
8. Battery APS2
9. USB Type-C cover
10. USB Type-C port
11. Lens focus knob
12. Lens cap
13. ON/OFF button
14. Laser rangefinder

Features

- Built-in laser rangefinder (up to 800 m)
- Built-in 3-axis accelerometer gyroscope (slope angle indication)
- 3 levels of sensitivity enhancement: Normal, High, Ultra
- 3 calibration modes: manual, semi-automatic and automatic
- Smooth Digital Zoom
- Multiple reticle options
- Scalable reticles (proportional to Zoom)
- 10 zeroing profiles (10 distances per profile)
- One-shot “Freeze-Zeroing” function
- Precise “Zoom zeroing” (reducing the MOA per click when zooming in)
- 9 display color palettes
- Pixel repair function
- “Display-Off” function
- Display dimming function
- Auto shutdown function
- Integrated Wi-Fi for remote control and personal device connectivity

- Device firmware update using the free Stream Vision 2 App
- High-strength aluminium alloy housing
- Recoil rated to .375H&H, 9.3×64 and 12-gauge
- Ballistic calculator
- Wireless Remote Control (purchased separately)

Video Recording

- Built-in photo and video recorder with audio
- 16 GB internal memory
- iOS and Android compatible
- Stores photos and videos in Cloud when using the Stream Vision 2 App
- Recoil recording
- Shadow recording

Battery Pack

- Built-in 4900 mAh Battery Pack APS5
- Quick-change rechargeable Li-Ion APS2/APS3 battery packs
- Internal and external battery charging via USB Type-C port

Power supply

Precautions

- Only use the charger supplied with the Battery Pack. The use of any other charger may irreparably damage the Battery Pack or the charger and may cause fire.
- Do not charge the Battery Pack immediately after bringing it from a cold environment to a warm one. Wait for 30-40 minutes for the Battery Pack to get warm.
- It is not recommended to charge the batteries with a charger connected to the USB port of a computer or laptop. It can damage the computer.
- Do not leave the Battery Pack unattended while charging.
- Never use a modified or damaged charger.
- Do not leave the Battery Pack with a charger connected to the power adapter after charging is complete.
- Do not expose the Battery Pack to high temperatures or an open flame.
- Do not submerge the Battery Pack in water.
- Do not connect this product to an external charging device with a power output exceeding 9V.
- Do not dismantle or deform the Battery Pack.
- Do not drop or hit the Battery Pack.
- Keep the Battery Pack out of the reach of children.

Recommendations for battery use

- During long-term storage, the Battery Pack should be partially charged – the charge level should be between 50% and 80%.

- Charge the Battery Pack at a temperature from 0° C to +45° C (32° F to +113° F), otherwise the battery life will decrease significantly.
- When using the Battery Pack at sub-zero (sub 32° F) temperatures the battery capacity decreases. This is normal and is not a defect.
- Do not use the Battery Pack at temperatures above those shown in the table – this may decrease battery life.
- The Battery Pack is short circuit protected; however, any situation that may cause short-circuiting should be avoided.

Battery Charging

Thermion 2 LRF Pro thermal imaging riflescopes come with a built-in rechargeable lithium-ion Battery Pack APS5 and a removable rechargeable lithium-ion APS2 Battery Pack. The batteries should be charged before first use.

The icons in the status bar will flash when the battery is low. The batteries need to be charged.

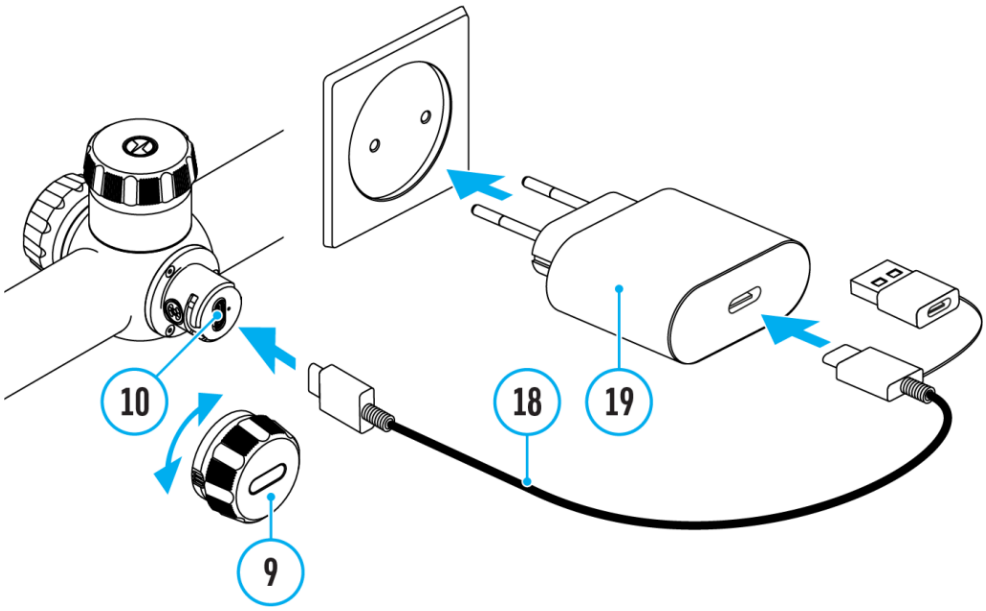

1. Open the USB Type-C cover **(9)** by turning it counterclockwise.
2. Connect the USB Type-C plug of the USB cable **(18)** to the USB Type-C port **(10)** in the body of the riflescope.
3. Connect the second USB plug of the USB cable **(18)** to the USB port on the power adapter **(19)** by removing the USB Type-A adapter.
4. Plug the power adapter **(19)** into a 100–240 V socket.

5. Wait until the batteries are fully charged (indication in the status bar: 1 100 2 100).

Attention! When charging rechargeable batteries with a USB Type-C connector **(10)** in the riflescope body section, charging priority is given to the built-in battery. When the device is off, both batteries are charged at the same time. When using the device, the external battery is discharged first.

The rechargeable lithium-ion APS2 and APS3* Battery Packs may be recharged using the APS** charger

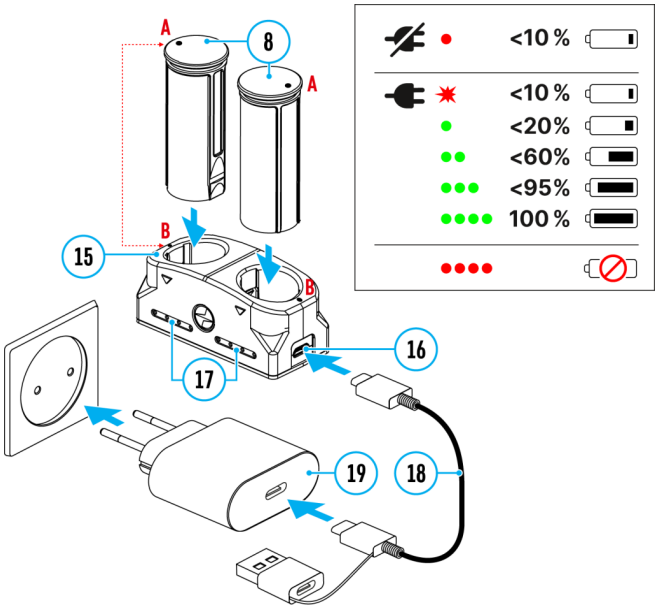

1. Insert the Battery Pack **(8)** along the rail into the APS charger **(15)** slot as far as it will go. The APS charger is supplied with your device or purchased separately.
2. Point **A** on the battery and point **B** on the charger should match.
3. Connect the USB Type-C plug of the USB cable **(18)** to the port **(16)** of the charger **(15)**.
4. Connect the second plug of the USB cable **(18)** to the USB port on the power adapter **(19)**.
5. Plug the power adapter **(19)** into a 100-240 V socket.
6. The LED indicator **(17)** will display battery charge status.
7. Wait until the battery is fully charged (LED indication **(17)**: ●●●●).
8. Two batteries* can be charged at the same time.

(17) LED Indicator*	**Battery Charge Status**
●	Battery level is from 0% to 10%. Charger is not connected to a power supply.
✸	Battery level is from 0% to 10%. Charger is connected to a power supply.
●	Battery level is from 10% to 20%.

●●	Battery level is from 20% to 60%.
●●●	Battery level is from 60% to 95%.
●●●●	Battery completely charged. Charging will automatically stop. The battery can be disconnected from the charger.
●●●●	Defective battery. Do not use the battery.

* Purchased separately.

** Included in the delivery package.

*** LED indicator displays the current battery charge status for 30 seconds when the APS charger is not plugged in. When the power is being supplied, the indicator is constantly displaying the current battery charge status, the LEDs are additionally flickering to display the battery charging process.

Battery Installation

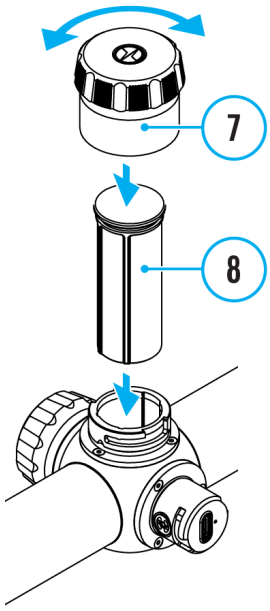

1. Turn the battery cover **(7)** counter clockwise and remove.
2. Install the battery **(8)** into the battery compartment along the special guides in the device casing designed for it.
3. When properly installed, the battery is locked into the slot with a special clip.
4. Close the battery cover **(7)** by turning it clockwise.

Switching and Changing the Batteries

Thermion 2 LRF Pro riflescopes are powered by 2 batteries: a built-in APS5 internal battery and a removable APS2 or APS3 battery.

1. If there are two batteries in the device, two battery icons are displayed in the status bar (1 – built-in battery, 2 – removable battery). The device battery is displayed in grey and white; it is grey when inactive.
2. When there is no removable battery in the device, only one icon for the built-in battery displays in white in the status bar.
3. When both batteries are fully charged, the device is powered by the removable battery. If there is low removable battery level, the device will switch to the built-in battery.
4. Battery charge level is displayed in % above the icon in the status bar while charging.
5. It is possible to replace the removable battery even while the device is on.

Attention! When installing a removable battery with a sufficient charge level, the device will automatically switch to it.

External Power Supply

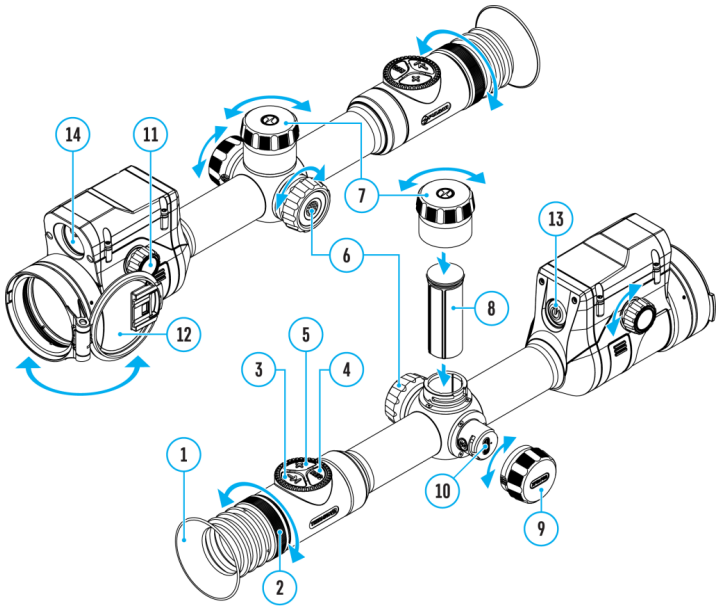

Power can be supplied from an external source such as a 5V or 9V power bank.

1. Connect the external power supply to the micro USB Type-C port **(10)** of the riflescope.
2. The riflescope switches to external power source, while built-in Battery Pack APS5 and removable Battery Pack APS2 (or APS3*) will gradually recharge.
3. A rechargeable battery icon 100 indicating a percentage of the battery life will appear in the status bar.
4. When you turn off external power source, the riflescope switches over to the removable battery without turning off. When there is no removable battery or low power level the device switches to the built-in battery.

* Available separately

Warning! Charging APS2 / APS3 / internal APS5 batteries at air temperatures below 0° C (32° F) may reduce battery life. When using external power, connect the Power Bank to the device after it has been turned on and working for several minutes.

Getting started

Mounting on the Rifle

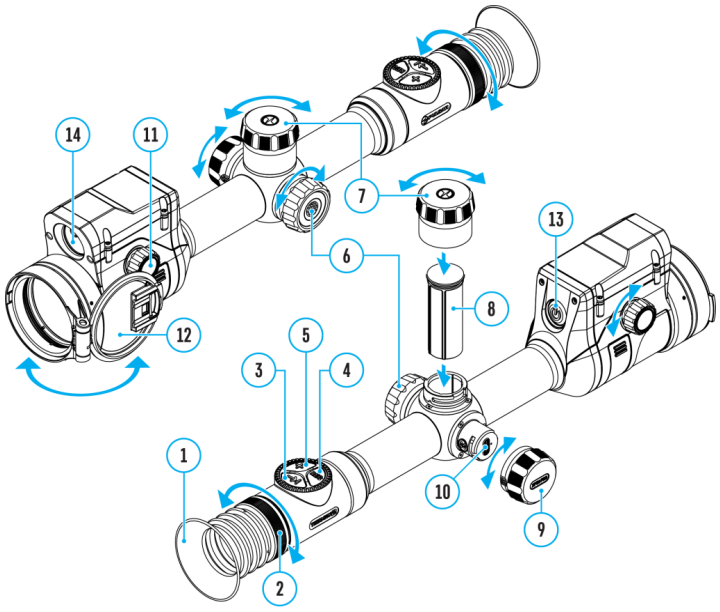

To ensure accurate shooting the Thermion 2 LRF Pro riflescope should be properly mounted on the rifle.

- Mount the riflescope with 30mm scope rings or a single-piece scope mount, purchased separately. Use only high-quality mounts and rings compatible with your rifle. Follow the mount manufacturer's installation instructions and use the proper tools.
- When mounting the riflescope, adjust the position of the scope on the rifle to achieve optimal, comfortable eye relief as specified by the **Technical Specifications**. Failure to comply with this recommendation may result in injury to the shooter.
- Install the riflescope as low as comfortably possible without contacting the barrel or receiver.
- In order to avoid pinching the riflescope body, tighten ring screws to a maximum of 2.5 Nm (22.1 in.-lbs). Using a torque wrench is recommended.
- Using the included eyecup **(1)** is recommended to increase camouflage and avoid detection. The eyecup is mounted on the riflescope's eyepiece via integral magnets.

- Before using the riflescope (especially for hunting), follow instructions in the **Zeroing** section.

Powering on and Image Settings

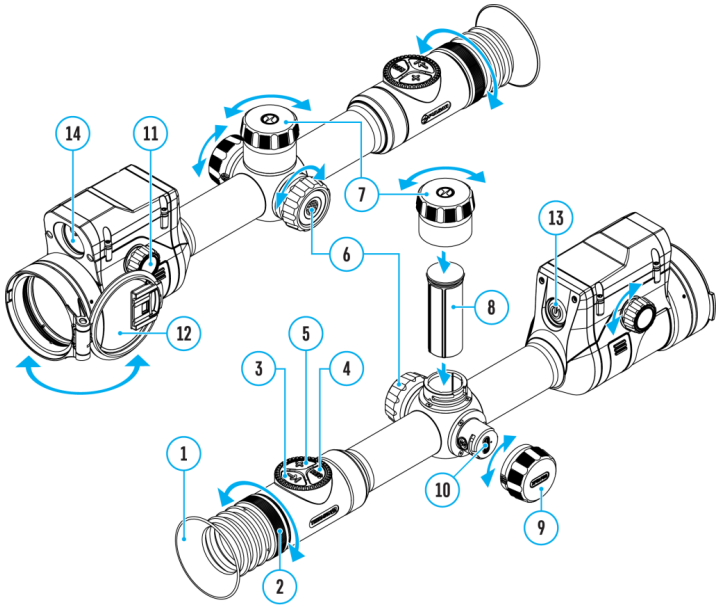

1. Remove the lens cover **(12)**.
2. Turn the unit on with a short press of the **ON/OFF (13)** button.
3. Adjust the sharpness of the symbols on the display by rotating the dioptre adjustment ring of the eyepiece **(2)**.
4. Rotate the lens focus knob **(11)** to focus on the object being observed.
5. Enter the main menu with a long press of the controller button **(6)** and select the desired Calibration Mode: **manual (M), semi-automatic (SA)** or **automatic (A)**.
6. Calibrate the image with a short press of the **ON/OFF (13)** button (when calibration mode **SA** or **M** has been selected). Close the lens cap before manual calibration.
7. Select the required **amplification level** (**"Normal"** N, **"High"** H, **"Ultra"** U) by briefly pressing the **LRF (3)** button.
8. Activate the quick menu by briefly pressing the controller button **(6)** to adjust the brightness and contrast of the display (see the **Quick Menu Functions** section).
9. Repeatedly press the **ZOOM (5)** button to change the magnification ratio of the riflescope. While the magnifying glass icon is visible on the screen, rotate the controller ring **(6)** for smooth digital zooming from the current magnification.
10. Power the device off with a long press of the **ON/OFF (13)** button.

Observation conditions: time of day, weather, type of observation objects affect the image quality. Custom settings for brightness, display contrast as well as the function of adjusting the microbolometer sensitivity level will help to achieve the desired quality in a particular situation.

Warning! Never point the lens at intensive energy sources such as laser radiation emitting devices or the sun. It can damage electronic components in the device. The warranty does not cover damage arising from failure to comply with operating instructions.

Button Operation

Operation	Button	
Power device on	⏻	short press
Power device off	⏻	long press for 3 secs
Turn display off	⏻	long press for less than 3 secs
Turn display on	⏻	short press
Calibrate the microbolometer	⏻	short press
Control discrete digital zoom	+	short press
Smooth Zooming	◎	rotation
PiP on/off	+	long press
Switching colour pallets	→|	long press
Disable SPOA of ballistic calculator	→|	double press
Video Recorder	**Button**	
Start/pause/resume video recording	**REC**	short press
Stop video recording	**REC**	long press
Switch to video / photo mode	**REC**	long press
Capture Photo	**REC**	short press

Main Menu	Button
Enter main menu	long press
Navigation through menu	rotation
Enter menu items	short press
Confirm value	short press
Exit menu items	long press
Exit main menu	long press

Quick Menu	Button
Enter quick menu	short press
Switch between quick menu options	short press
Parameter change	rotation
Exit quick menu	long press

Rangefinder	Button
Activate rangefinder	short press
Measure distance	short press
Start/stop SCAN mode	long press

Zeroing

How to Zero

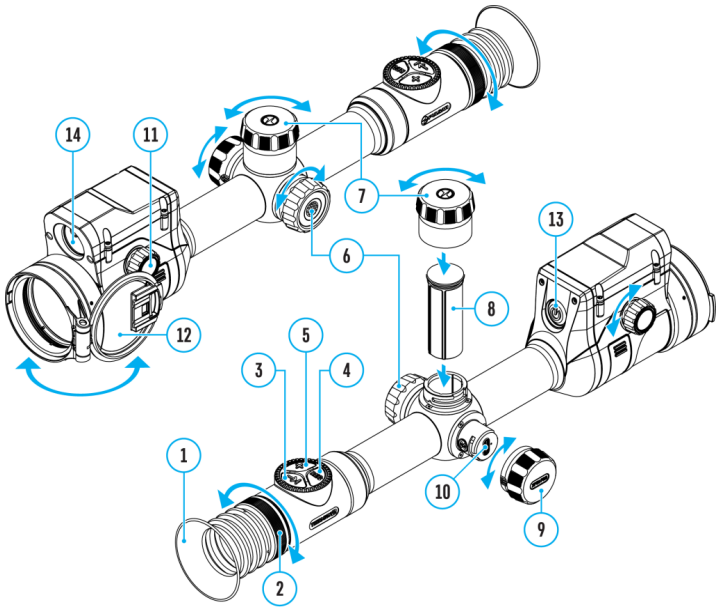

Zeroing at a temperature close to the riflescope's operating temperature is recommended.

Step 1. Take a shot

1. Shooting from a benchrest is recommended.

2. Set a target at a known distance.

3. Adjust the riflescope according to the Powering on and Image Setting section.

4. Select the zeroing profile (see **Reticle & Zeroing** → **Zeroing Profile** main menu item)

5. Point the rifle at the center of the target and shoot.

Step 2. Align the reticle with the point of impact

1. Press and hold the controller button **(6)** to enter the main menu.

2. Add the distance you are aiming at (e.g. 100 meters): **Reticle & Zeroing** → **Add New Distance** . Select the value for each distance digit by rotating the controller ring **(6)**. Press the controller button **(6)** briefly to switch between digits. After setting the required distance, press and hold the controller button **(6)** to save it.

3. After adding the distance, it will switch to the **Zeroing** menu . An auxiliary cross will appear in the center of the display, and X and Y coordinates of the auxiliary cross will appear in the upper right corner.

4. Press the controller button **(6)** briefly to enter the **Windage/Elevation** submenu.

5. While holding the reticle at the aiming point, move the auxiliary cross until it is aligned with the impact point by rotating the controller ring **(6)**.

6. To change the direction of the auxiliary cross movement from horizontal to vertical, press the controller button **(6)** briefly.

Zoom Zeroing function:

To improve the accuracy of zeroing, you can change the magnification in the menu . The larger the magnification, the smaller the step of shifting the reticle on the display relative to the image from the sensor.

Click value, mm@100 m – when magnifying, x	21 mm – 2x
	10.5 mm – 4x
	5.25 mm – 8x
	2.6 mm – 16x

One-shot "Freeze Zeroing" function:

Using the **Freeze** function allows you to make adjustments without the need to hold the rifle precisely at the initial aiming point – freezing the zeroing screen (refer to **Reticle & Zeroing** menu item ⇒ **Distance** submenu ⇒ **Zeroing** submenu ⇒ **Freeze** submenu or short pressing of the **ON/OFF (13)/REC (4)** button (depending on the firmware version). The image will "freeze" and the icon will appear.

Step 3. Save the coordinates

1. Press and hold the controller button **(6)** to save a new position for the reticle. The reticle will be aligned with the impact point and it will exit the **Windage/Elevation** submenu.

2. Press and hold the controller button **(6)** again to exit the zeroing settings menu – the message **"Zeroing coordinates saved"** appears, confirming the successful operation.

3. Fire a second shot – now the point of impact and the aiming point must be matched.

Add New Distance

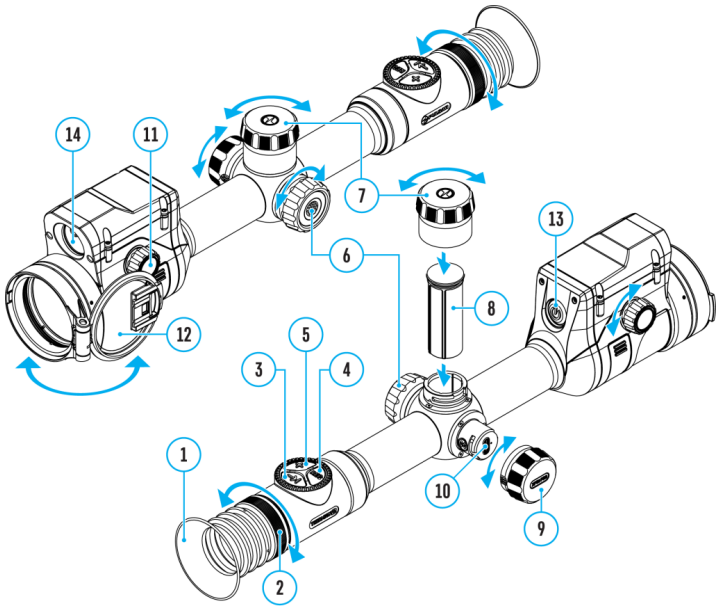

To zero your riflescope, you need to set a zeroing distance first in the range of 1 to 910 m (955 yards).

1. Press and hold the controller button **(6)** to enter the main menu.
2. Rotate the controller ring **(6)** to select the **Reticle & Zeroing** menu item.
3. Press the controller button **(6)** briefly to enter the Reticle & Zeroing submenu.
4. Rotate the controller ring **(6)** to select **Add New Distance** menu item.
5. Press the controller button **(6)** briefly to enter the submenu.
6. Rotate the controller ring **(6)** to select a value for each digit. Press the controller button **(6)** briefly to switch between digits 100m .
7. Having set the desired distance, press and hold the controller button **(6)** to save it.

The distance you set first becomes a **primary distance** – shown with icon 0 on the right to the distance value.

Note: Maximum number of zeroing distances is 10 for each profile.

Zeroing settings

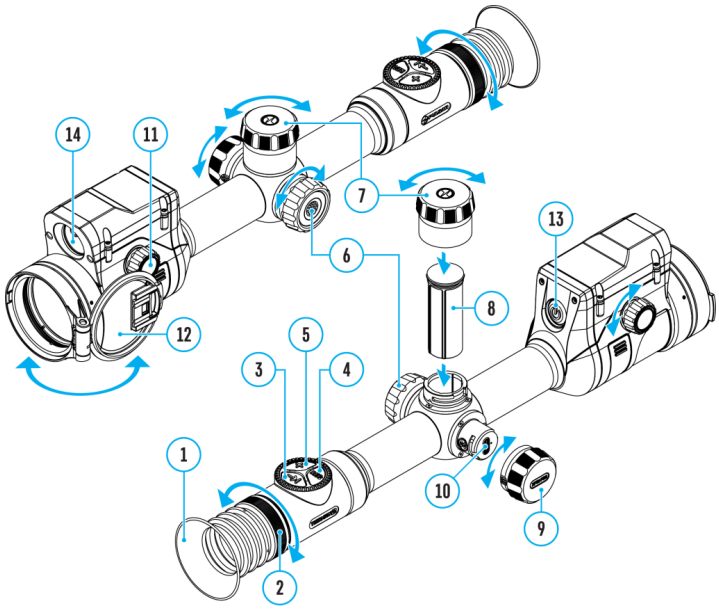

1. Press and hold the controller button **(6)** to enter the main menu.
2. Rotate the controller ring **(6)** to select the **Reticle & Zeroing** menu item and enter by briefly pressing the controller button **(6)** – zeroed distances are displayed at the bottom.
3. The values (e.g., +7.0) shown on the right of the distance values, stand for the number of clicks along the Y axis, at which the reticle position at other distances differs from the reticle position in the primary distance.
4. To zero at any distance again, rotate the controller ring **(6)** to select the required distance and briefly press the controller button **(6)**.
5. Rotate the controller ring **(6)** to select the **Zeroing Parameters Settings** and enter by briefly pressing the controller button **(6)**.
6. **Zeroing** screen, which allows the change of zeroing coordinates, will appear:

Windage/Elevation

Adjust the reticle position through the **Windage/Elevation** submenu in **Zeroing** . For more information, see the How to Zero section.

Magnification (when Zeroing)

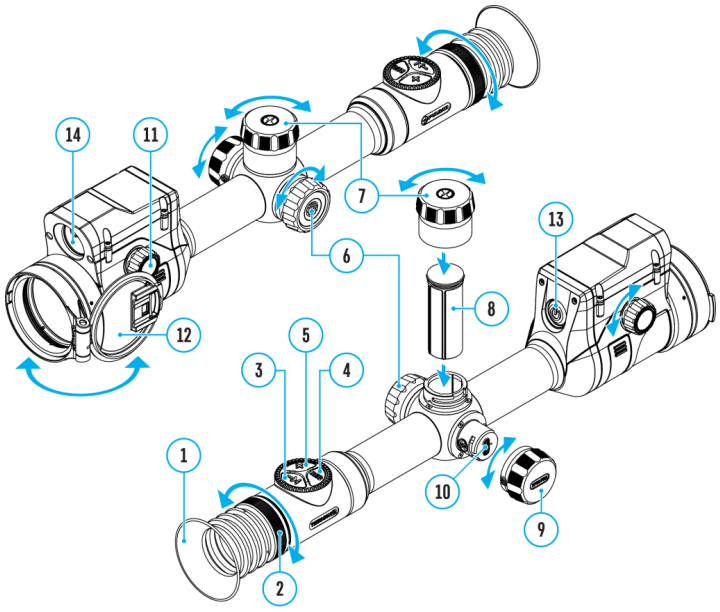

Magnification allows you to magnify via the device's digital zoom when zeroing, which reduces the MOA-per-click values of adjustments and improves zeroing accuracy.

1. In the **Zeroing** menu, rotate the controller ring **(6)** to select the **Magnification** submenu item and enter by briefly pressing the controller button **(6)**.
2. Rotate the controller ring **(6)** to select a digital magnification value of the riflescope (e.g., x4).
3. Press the controller button **(6)** briefly to confirm your selection.

The minute of angle click when using the Magnification function is indicated in the Table of **Technical Specifications**.

Freeze

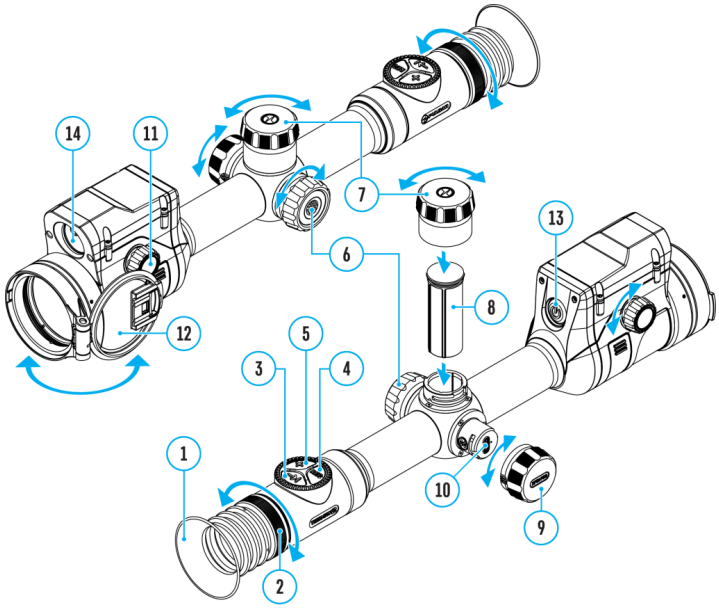

The “freeze” function allows the user to adjust the riflescope’s reticle on a still image while manipulating the rifle.

1. In the Zeroing menu, rotate the controller ring **(6)** to move the cursor to the **Freeze** function.
2. Align the reticle with the point of aiming and press the controller **(6)** or **ON/OFF (13)**/**REC (4)** button (depending on the firmware version). A screenshot will be taken, an icon will appear.
3. Go to the additional **Windage/Elevation** submenu and adjust the position of the reticle (see the How to Zero section).
4. Select the **Freeze** submenu item again and briefly press the controller **(6)** or **ON/OFF (13)**/**REC (4)** button (depending on the firmware version) – the image will “unfreeze”.

Name Distance

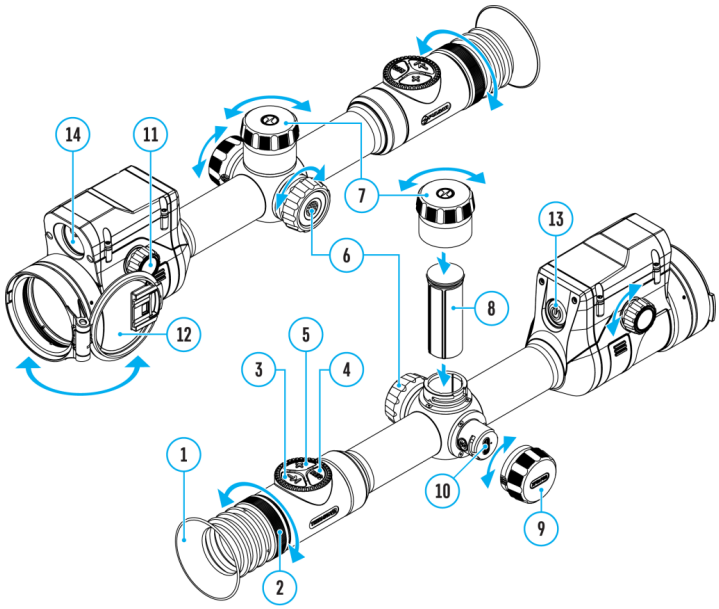

1. In the Zeroing menu, rotate the controller ring **(6)** to select the **Name Distance** submenu item and enter it by briefly pressing the controller button **(6)**.
2. Rotate the controller ring **(6)** to select a value for each digit. Press the controller button **(6)** briefly to switch between digits.
3. Press and hold the controller button **(6)** to confirm the selection.

Change Primary Distance

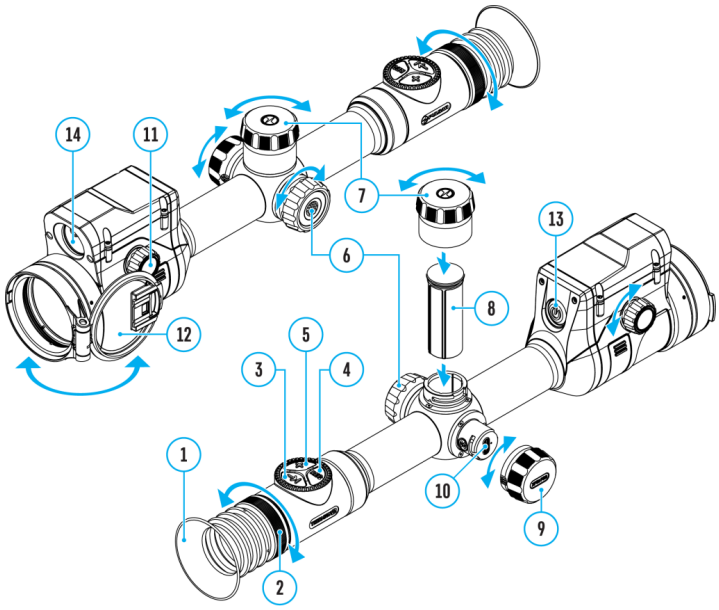

1. Press and hold the controller button **(6)** to enter the main menu.
2. Rotate the controller ring **(6)** to select the **Reticle & Zeroing** menu item and enter by briefly pressing the controller button **(6)** – zeroed distances are displayed at the bottom.
3. Select a non-primary distance and enter the submenu for operating the distance with a brief press of the controller button **(6)**.
4. Select **Change Primary Distance** item.
5. Press the controller button **(6)** briefly.
6. Icon next to the selected distance confirms the change of primary distance.

There will also be a recalculation of corrections in clicks for other distances relative to the new primary distance.

Delete Distance

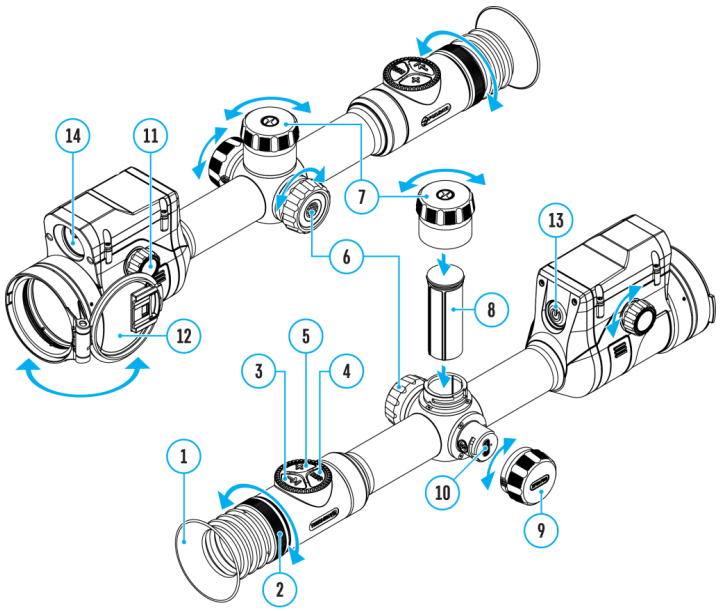

1. Press and hold the controller button **(6)** to enter the main menu.
2. Rotate the controller ring **(6)** to select the **Reticle & Zeroing** menu item and enter by briefly pressing the controller button **(6)** – zeroed distances are displayed at the bottom.
3. Select the distance you wish to delete and enter the submenu for operating the distances with a brief press of the controller button **(6)**.
4. Select **Delete Distance** item.
5. Press the controller button **(6)** briefly.

6. Select *“Yes”* in the appeared dialog box to delete a distance. *“No”* – to cancel deletion.
7. Press the controller button **(6)** briefly to confirm your selection.

Attention! If the primary distance is deleted, the first distance on the list automatically becomes the new primary distance.

Interface

Status Bar

The status bar at the bottom of the display shows current operating statuses via icons, including:

1. Actual zeroing profile (e.g., A)

2. Zeroing distance (e.g., 100 m)

3. Amplification level (e.g., High)

4. Smoothing Filter (displayed when the function is on)

5. Calibration mode (a countdown timer :05 will appear instead of the calibration icon when in automatic calibration mode with 5 seconds remaining until automatic calibration)

6. Current magnification

7. Microphone

8. Bluetooth:

– Bluetooth is on

– the device with Bluetooth is connected

9. Wi-Fi connection

10. Auto Shutdown function (e.g., 5 min.)

11. Clock

12. Power supply:

- Battery discharge level (when riflescope is powered by a built-in or removable battery).
- External battery power indicator (if the riflescope is powered by an external power supply).
- Battery indicator with current percentage of charge (when charging from an external power source).
- Battery indicator shows a low battery charge
- Battery indicator shows a low internal battery charge

Quick Menu

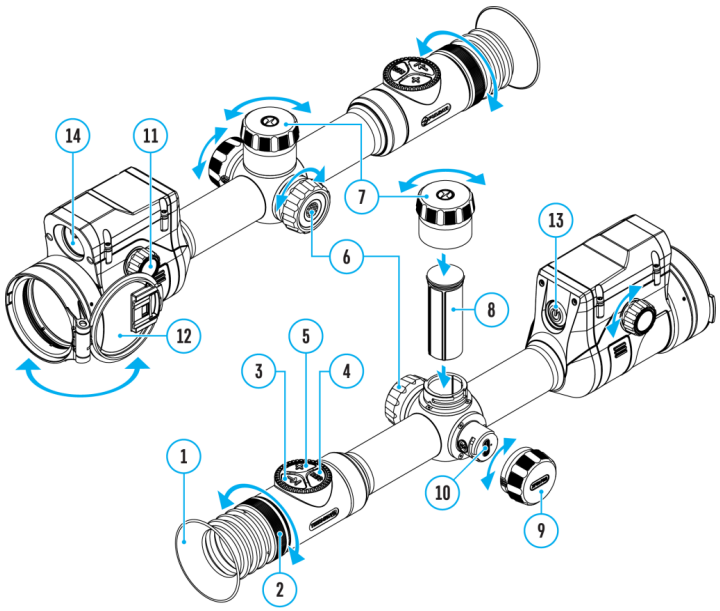

The quick menu allows you to control the main settings of the riflescope (brightness, contrast), amplification modes, select the ballistic calculator distance, and change the zeroing distance (if there are several) to another one in the current profile.

- Press the controller button **(6)** briefly to enter the quick menu.
- A short press of the controller button **(6)** enables you to switch between functions, as described below.

Brightness – rotate the controller ring **(6)** to change the display brightness value from 00 to 20.

Contrast – rotate the controller ring **(6)** to change the image contrast value from 00 to 20.

Amplification Levels – allows you to select one of three **amplifying levels of sensitivity** (Normal N, High H, Ultra U).

Note: To maintain brightness and contrast settings when changing amplifying levels, activate **User Mode**.

100m – information on the current profile and zeroing distance in this profile (e.g., profile A, zeroing distance of 100 m). This information is always displayed in the status bar. Rotate the controller ring **(6)** to switch between the zeroing distances in the selected profile. This function is available if there are two or more distances in the profile.

> *Tip:* To quickly switch between distances while hunting, leave the Zeroing Distance option selected before exiting the quick menu. The menu item will be saved, and the next time you enter the quick menu, you can quickly switch the zeroing distances by turning the controller **(6)** (for example, 100 m, 150 m, 200 m).

– change the distance to calculate corrections for the ballistic calculator. Rotate the controller ring **(6)** to select the distance.

This function is only visible when the ballistic profile is selected.

- Press and hold the controller button **(6)** to exit the menu or wait 10 seconds to exit automatically.

Main Menu

Enter the Main Menu

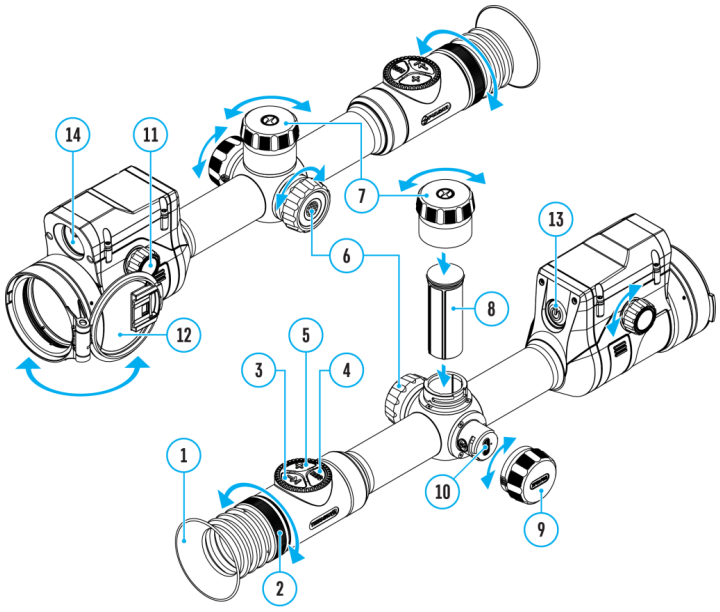

1. Enter the main menu with a long press of the controller button **(6)**.
2. To move through the main menu items, rotate the controller ring **(6)**.
3. Press the controller button **(6)** briefly to open subitems of the main menu.
4. Press and hold the controller button **(6)** to exit from a subitem of the main menu.
5. Automatic exit from the main menu occurs after 10 seconds of inactivity.

Note: When entering the main menu, the background image darkens to enhance the menu visibility. This is normal and not a defect.

General View of the Menu

Tab 1

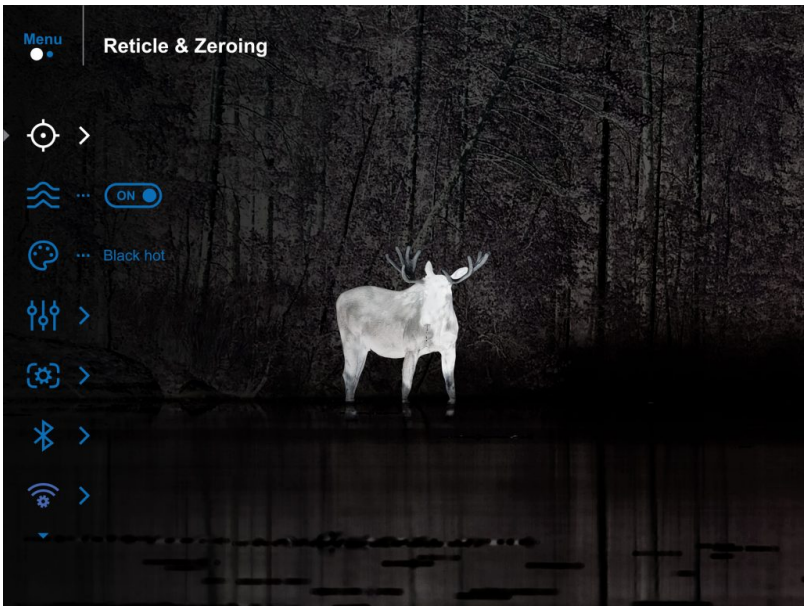

Tab 2

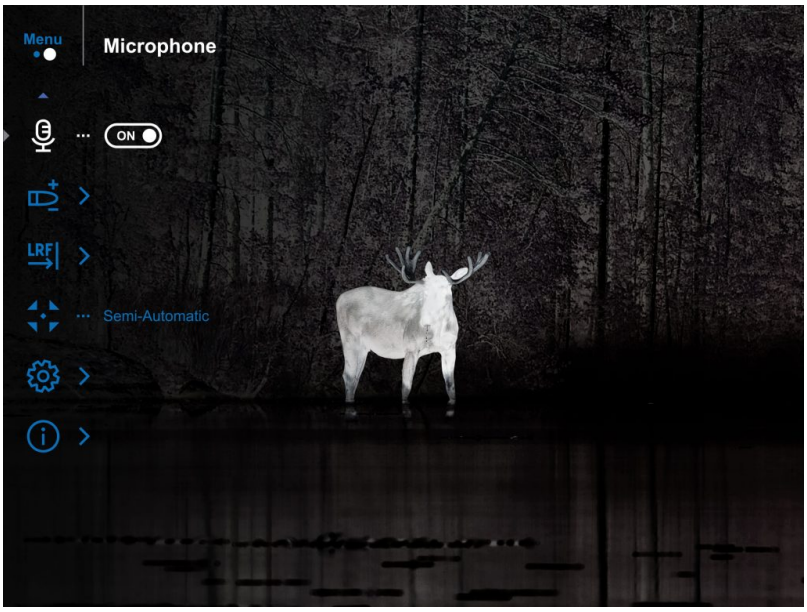

Reticle & Zeroing

Zeroing Profile

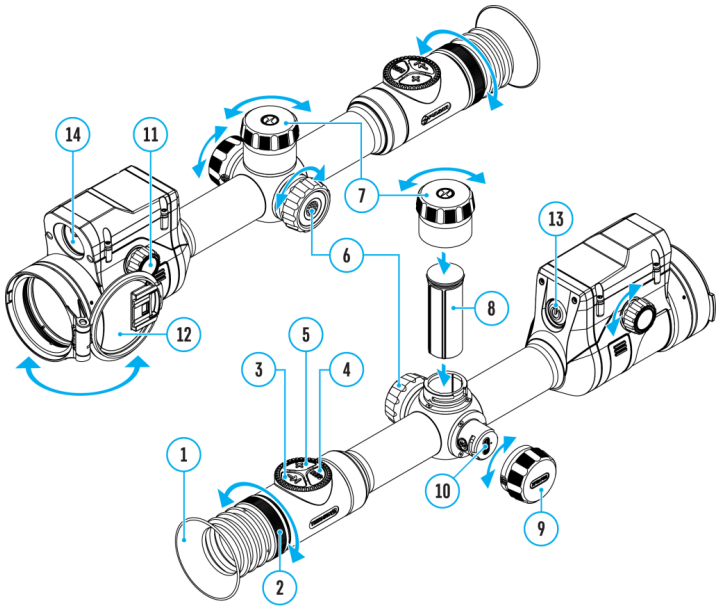

This item of the main menu allows you to select one of ten profiles (A, B, C, D, E, F, G, H, I, J) to use. Each profile stores information on the following parameters:

- A set of zeroed distances
- Reticle color
- Reticle type
- Ballistic profile on/off

Different profiles can be used when using the riflescope on different rifles or when shooting with different bullets.

Zeroing profiles cannot be deleted. You can change the parameters of zeroing distances or delete distances within a profile. You can also change the name of the zeroing profile in the **Stream Vision Ballistics** App.

1. Press and hold the controller button **(6)** to enter the main menu.
2. Rotate the controller ring **(6)** to select the **Reticle & Zeroing** menu item.
3. Press the controller button **(6)** briefly to enter the Reticle & Zeroing submenu.
4. Press the controller button **(6)** briefly to enter the **Zeroing Profile** submenu.
5. Rotate the controller ring **(6)** to select one of the zeroing profiles (marked with the letters A, B, C, D, E, F, G, H, I, J).
6. Confirm your selection with a short press of the controller button **(6)**.
7. The name of the selected profile appears in the status bar at the bottom of the display.

Reticle Type

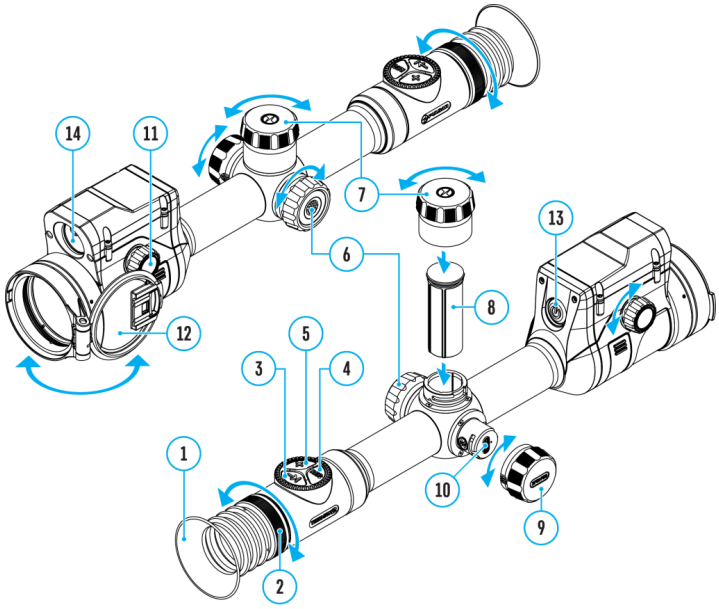

Selection of the aiming reticle shape.

1. Press and hold the controller button **(6)** to enter the main menu.
2. Rotate the controller ring **(6)** to select the **Reticle & Zeroing** menu item.
3. Press the controller button **(6)** briefly to enter the Reticle & Zeroing submenu.
4. Rotate the controller ring **(6)** to select the **Reticle Type** submenu.
5. Press the controller button **(6)** briefly to enter the Reticle Type submenu.
6. Rotate the controller ring **(6)** to select the desired aiming reticle shape from the list that appears. The reticle type changes as the cursor goes down the reticle list.
7. Press the controller button **(6)** briefly to confirm the selection.

Note: the riflescope supports **scalable reticles**.

Reticle Colour

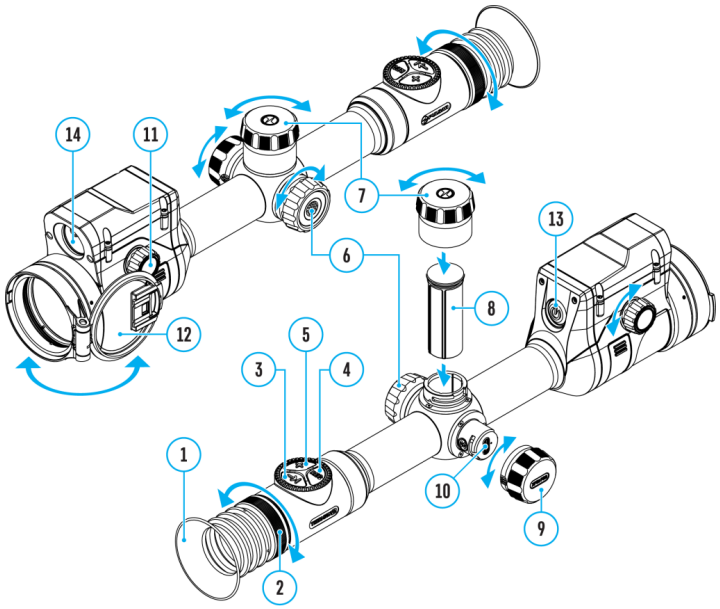

Selection of reticle colour.

1. Press and hold the controller button **(6)** to enter the main menu.
2. Rotate the controller ring **(6)** to select the **Reticle & Zeroing** menu item.
3. Press the controller button **(6)** briefly to enter the Reticle & Zeroing submenu.
4. Rotate the controller ring **(6)** to select the **Reticle Color** submenu.
5. Press the controller button **(6)** briefly to enter the Reticle Color submenu.
6. Rotate the controller ring **(6)** to select one of the colour options for the reticle: Black/Red, White/Red, Black/Green, White/Green, Red, Green, Yellow, Blue, Orange, Black/White, White/Black.
7. Press the controller button **(6)** briefly to confirm the selection.

Reticle Brightness

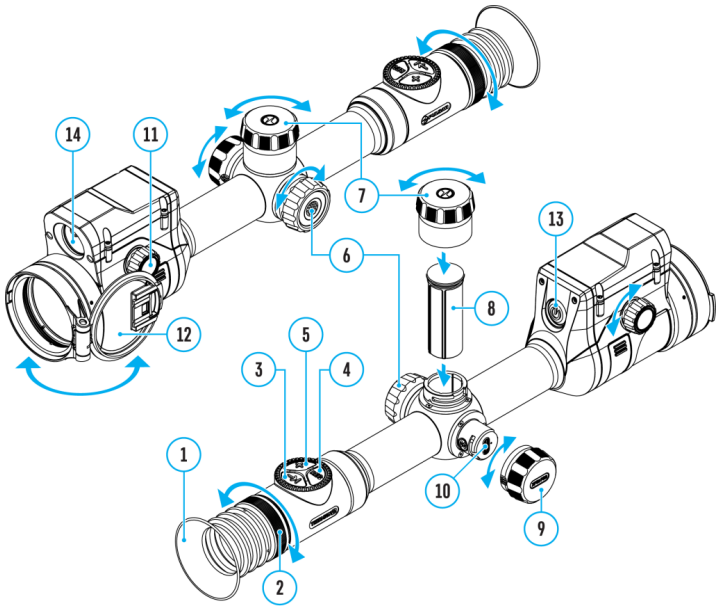

Adjust the brightness level of the aiming reticle.

1. Press and hold the controller button **(6)** to enter the main menu.
2. Rotate the controller ring **(6)** to select the **Reticle & Zeroing** menu item.
3. Press the controller button **(6)** briefly to enter the Reticle & Zeroing submenu.
4. Rotate the controller ring **(6)** to select the **Reticle Brightness** submenu.
5. Press the controller button **(6)** briefly to enter the Reticle Brightness submenu.
6. Rotate the controller ring **(6)** to set the desired brightness level (1 to 10).
7. Press the controller button **(6)** briefly to confirm the selection.

Smoothing Filter

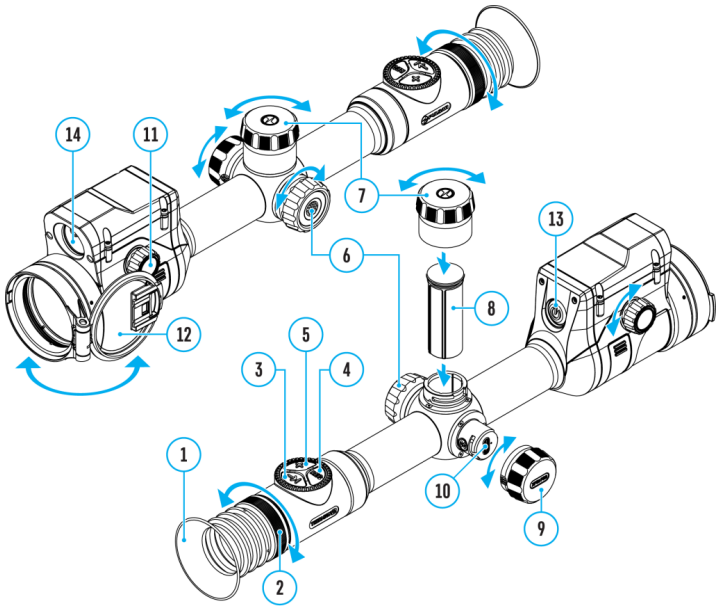

Used to reduce digital distortion while maintaining a high level of sensitivity.

Smoothing Filter Off

Smoothing Filter On

1. Press and hold the controller button **(6)** to enter the main menu.
2. Rotate the controller ring **(6)** to select the **Smoothing Filter** icon.
3. Press the controller button **(6)** briefly to turn the filter on/off.

Colour Modes

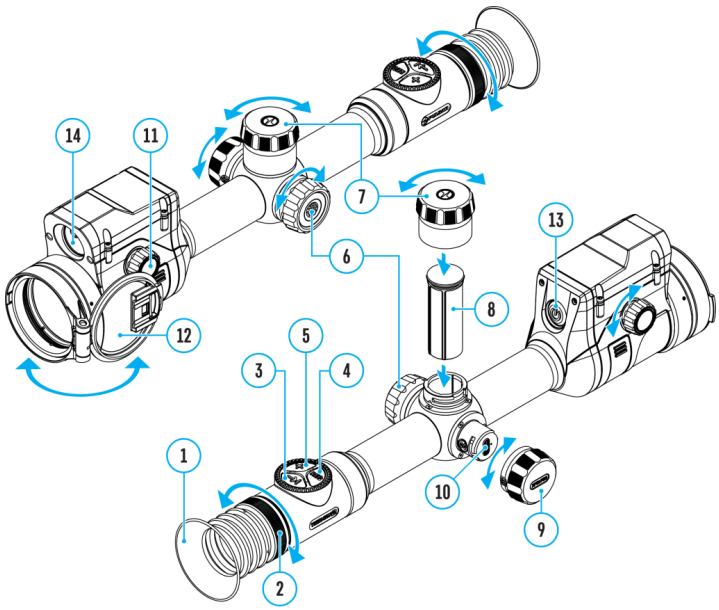

Colour mode selection.

White hot is the default display mode.

The Colour Modes menu item allows you to activate or deactivate an alternative palette:

1. Press and hold the controller button **(6)** to enter the main menu.

2. Select the **Colour Modes** menu item.
3. Press the controller button **(6)** briefly to enter the Colour Modes submenu.
4. Rotate the controller ring **(6)** to select one of the palettes described below.
5. Press the controller button **(6)** briefly to confirm activate or deactivate the selected palette.
6. When switching palettes by long pressing the **LRF (3)** button, only active palettes will be cycled through.

Tip: to preserve brightness and contrast values when switching palettes, activate **Save image settings after shutdown** switch in User settings .

- White hot – a black and white palette where black = cold; white = hot
- Black hot – a black and white palette where white = cold; black = hot
- Green
- Red Hot
- Red Monochrome
- Rainbow
- Ultramarine
- Violet
- Sepia

Attention! The device should not be used to accurately measure temperature. The images generated are based on temperature contrast rather than true temperature readings.

User settings

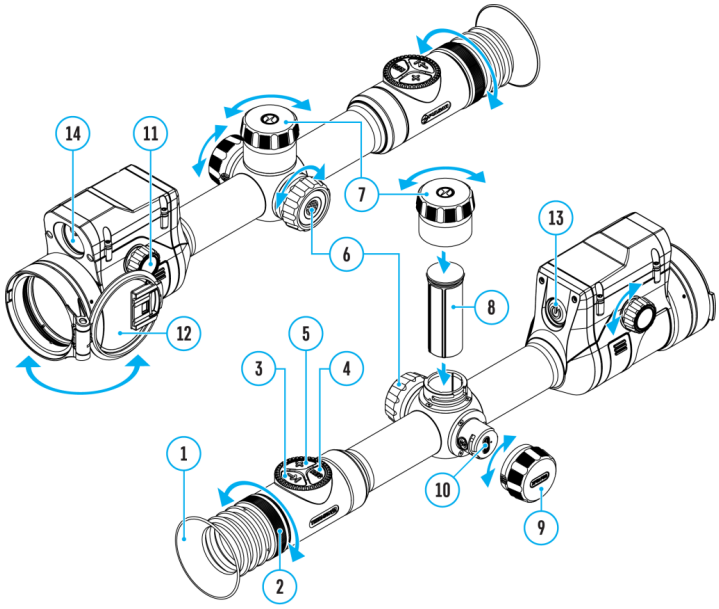

The User Settings submenu allows you to configure and save individual operating preferences in the device's memory, providing optimal convenience for the next use of the thermal imager.

Here one can set the following parameters:

- **Save image settings after shutdown** (saves brightness & contrast).
- **Save zoom after shutdown.**
- **Zoom activation with button.** If activated, smooth zooming is started using the **ZOOM (5)** button. If not activated, zoom level can be adjusted directly by rotating the controller ring without pressing the **ZOOM (5)** button.

1. Press and hold the controller button **(6)** to enter the main menu.
2. Rotate the controller ring **(6)** to select the **User Settings** submenu.
3. Press the controller button **(6)** briefly to open the submenu.
4. Rotate the controller ring **(6)** to select the desired parameter (**Save image settings after shutdown** **/ Save zoom after shutdown** **/ Zoom activation with button**).
5. Press the controller button **(6)** briefly to activate/deactivate or confirm the setting.

Display Settings

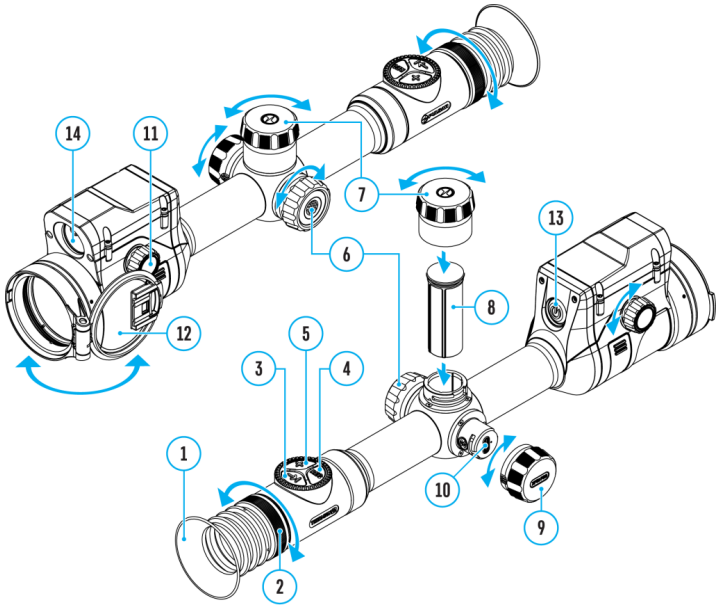

1. Press and hold the controller button **(6)** to enter the main menu.
2. Rotate the controller ring **(6)** to select the **Display Settings** menu item.
3. Press the controller button **(6)** briefly to enter the submenu.

Display dimming

The dimming function is designed to reduce the brightness of the display when using the device in the dark to reduce eye strain.

The Overlay Brightness value in dimming mode will be retained when the function is turned on again.

- Press controller ring **(6)** to select *On* for turning on the function or *Off* for turning it off.

Overlay Brightness

Adjust the brightness level of the icons and screensavers (Pulsar, Display off) on the display.

1. Press and hold the controller button **(6)** to enter the main menu.
2. Rotate the controller ring **(6)** to select the **Overlay Brightness** menu item.
3. Press the controller button **(6)** briefly to enter the Overlay Brightness submenu.
4. Rotate the controller ring **(6)** to set the desired brightness level (1 to 10).

5. Press the controller button **(6)** briefly to confirm the selection.

Auto Display off

If this function is enabled, the display turns off automatically when the device is in a vertical or horizontal position. This helps save battery power when the device is not being used.

1. Rotate the controller ring **(6)** to select the **Auto Display off** icon.
2. Press the controller button **(6)** button to select *On* for turning on the function or *Off* for turning it off.
3. If you want to switch on the display when the device is in an vertical position, press the **ON/OFF (13)** button.

Bluetooth

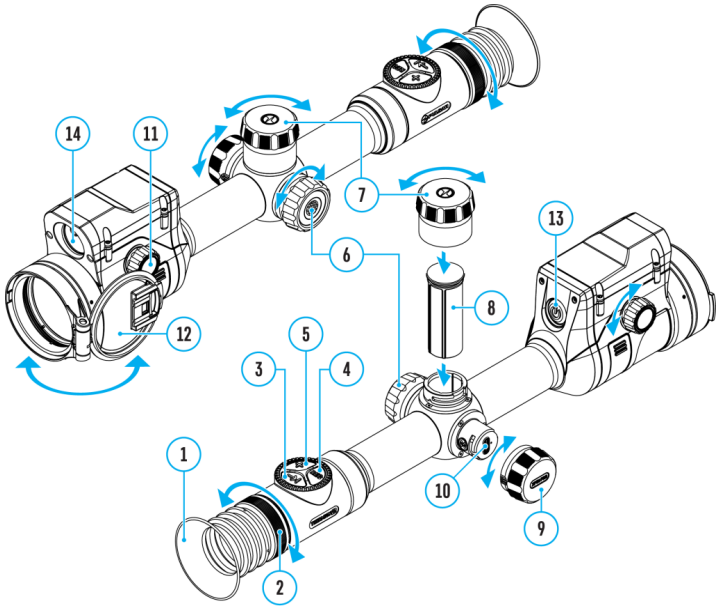

Bluetooth Activation

Turn on/off Bluetooth

1. Press and hold the controller button **(6)** to enter the main menu.

2. Rotate the controller ring **(6)** to select the **Bluetooth Activation** menu item.

3. A short press of the controller button **(6)** opens the submenu.

4. Turn Bluetooth on/off with a short press of the controller button **(6)**.

5. Press and hold down the controller button **(6)** to exit the submenu.

Bluetooth Pairing with Wireless Remote Control

The process of connecting the wireless remote control is described in the **Remote Control Activation** section.

Bluetooth Pairing with Stream Vision Ballistics App

1. Turn on the Bluetooth module.

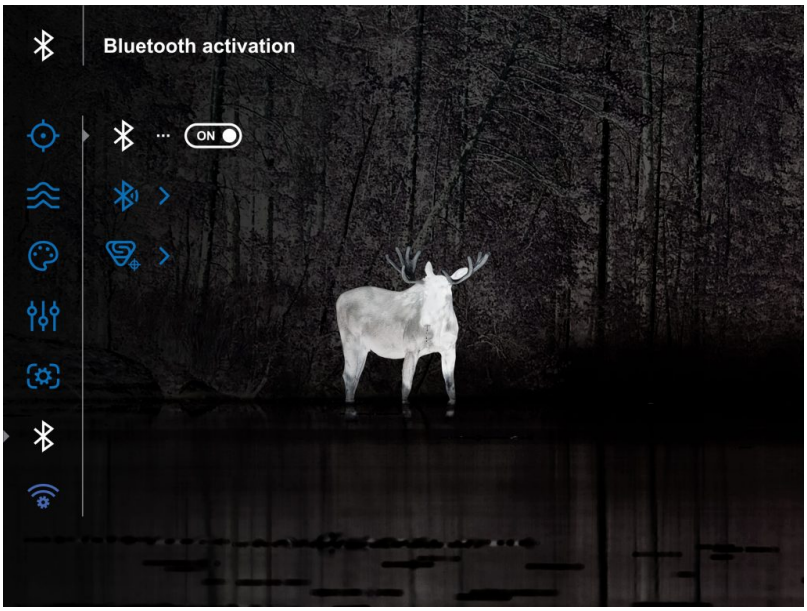

2. In the **Bluetooth** section of the menu, use the controller ring **(6)** to select the **Bluetooth pairing** menu item.

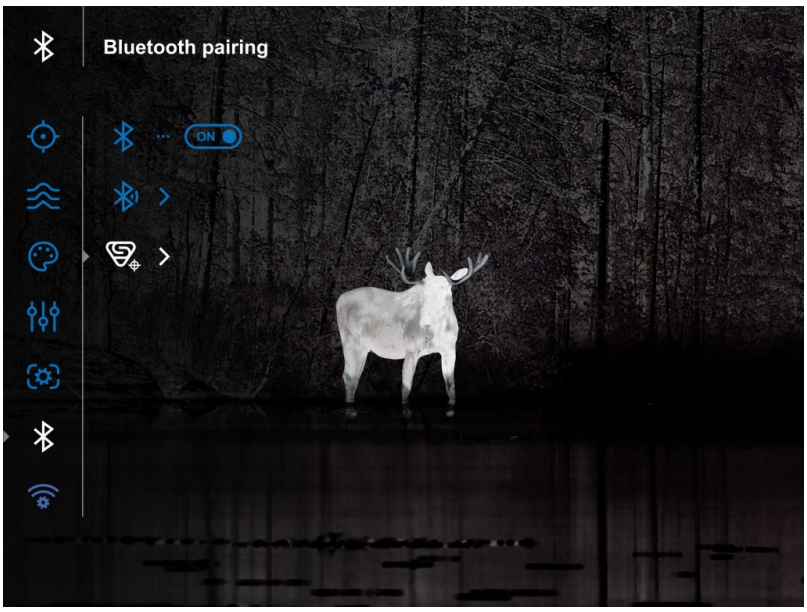

3. Confirm your selection with a short press of the controller button **(6)**.

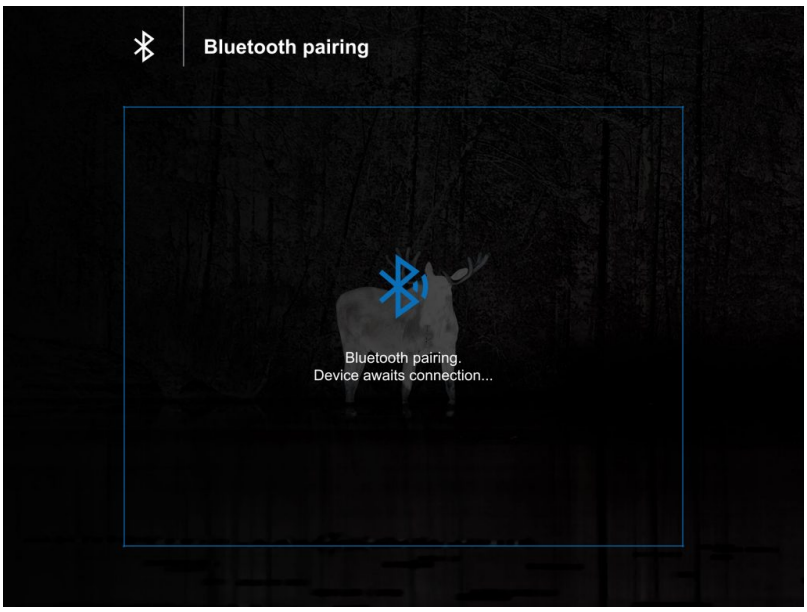

4. Turn on Bluetooth on your smartphone.

5. Connect your smartphone to the riflescope using the **Stream Vision Ballistics** App (Devices tab → Connect Device button).

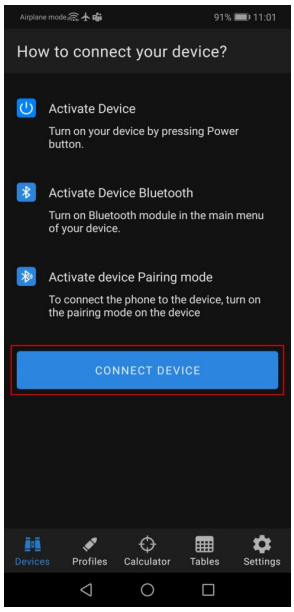

6. Click “Connect” next to your device.

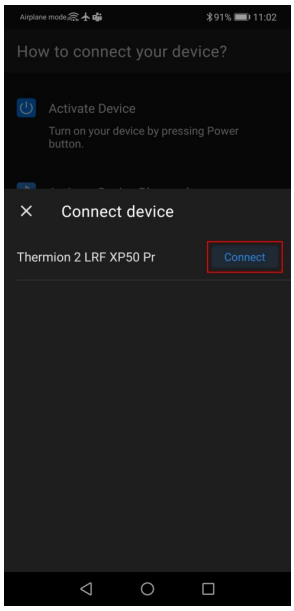

7. Enter the code from the riflescope screen in the Stream Vision Ballistics App.

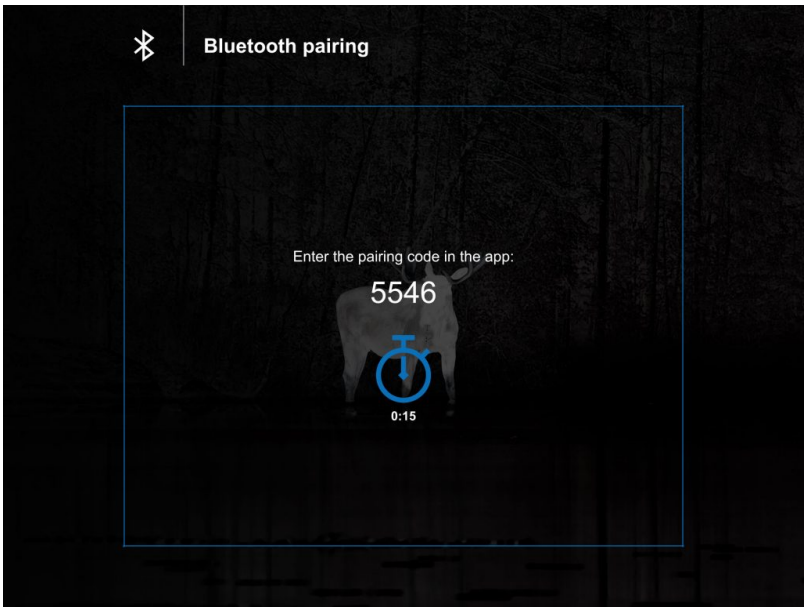

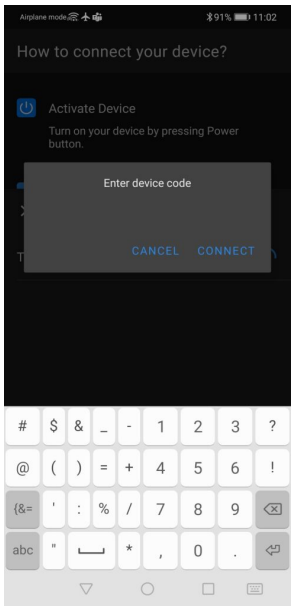

8. The blue Bluetooth icon next to the riflescope means that the riflescope is connected.

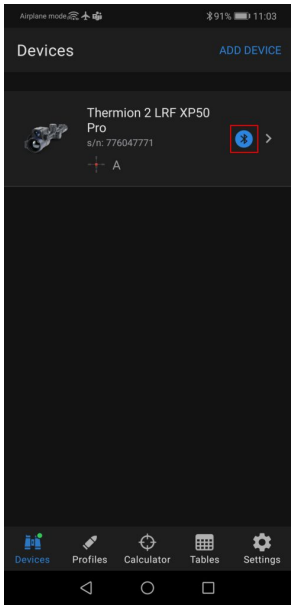

Wi-Fi Settings

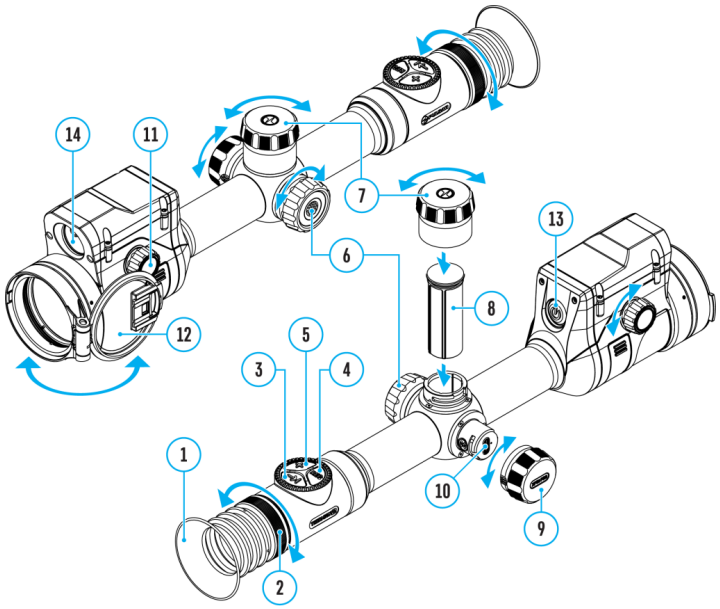

This item enables you to set up your riflescope for operation in a Wi-Fi network.

1. Press and hold the controller button **(6)** to enter the main menu.
2. Rotate the controller ring **(6)** to select the **Wi-Fi Settings** submenu.

3. Press the controller button **(6)** briefly to enter the submenu
4. Rotate the controller ring **(6)** to select the desired menu item.

Wi-Fi Activation

Turn on/off Wi-Fi

1. Rotate the controller ring **(6)** to select the **Wi-Fi Activation** menu item.
2. To turn Wi-Fi on, briefly press the controller button **(6)**. ON
3. To turn Wi-Fi off, briefly press the controller button **(6)**. OFF

Password Setup

This item enables you to set a password to access the riflescope from an external device. The password is used to connect an external device (i.e. smartphone) to the riflescope.

1. Press the controller button **(6)** to enter the **Password Setup** PAS submenu.
2. The unique password only for your device will appear on the image.
3. Rotate the controller ring **(6)** to set the desired password. Press the controller button **(6)** to toggle through the digits.
4. Press and hold the controller button **(6)** to save the password and exit from the submenu.

Access Level Setup

This sub-function enables you to configure the appropriate level of access to your device made available to the Stream Vision 2 application.

Owner level. A Stream Vision 2 user has full access to all the device's functions.

Guest level. A Stream Vision 2 user can only view video footage from the device in real time.

1. Press the controller button **(6)** to enter the **Access Level Setup** submenu.
2. Rotate the controller ring **(6)** to select **Owner** or **Guest**.
3. Confirm your selection with a short press of the controller button **(6)**.

Wi-Fi Band

This setting helps to solve smartphone connection issues in the following cases:

- If your smartphone does not support 5 GHz Wi-Fi band, switch to 2.4 GHz.

- Many Wi-Fi networks cause interference. In this case, switching between Wi-Fi bands can improve the connection between the device and the smartphone.

1. Press the controller button **(6)** to enter the **Wi-Fi Band** submenu.
2. Rotate the controller ring **(6)** to select the Wi-Fi bandwidth – **5 GHz** or **2.4 GHz**.
3. Confirm your selection with a short press of the controller button **(6)**.

Microphone

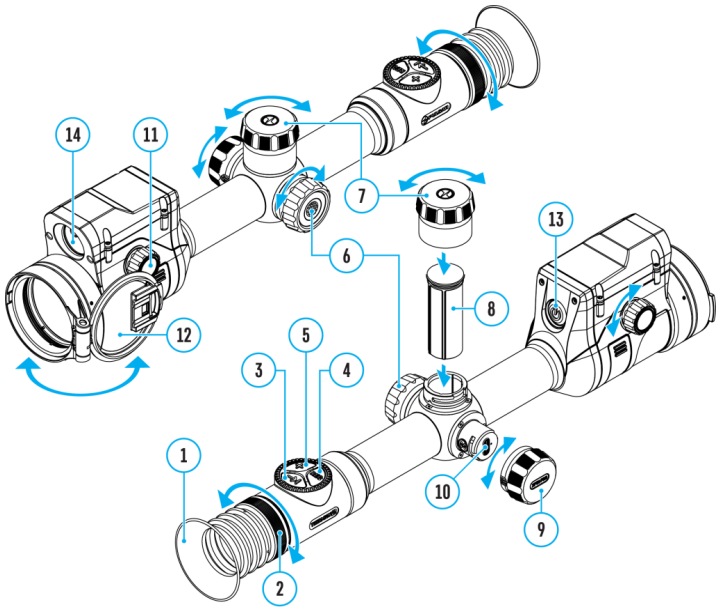

Turning on/off Microphone.

This item allows you to enable (or disable) the microphone for recording sound during video recording.

1. Press and hold the controller button **(6)** to enter the main menu.
2. Rotate the controller ring **(6)** to select the **Microphone** menu item.
3. To turn on the microphone, briefly press the controller button **(6)**. ON
4. To turn off the microphone, briefly press the controller button **(6)**. OFF

Ballistics

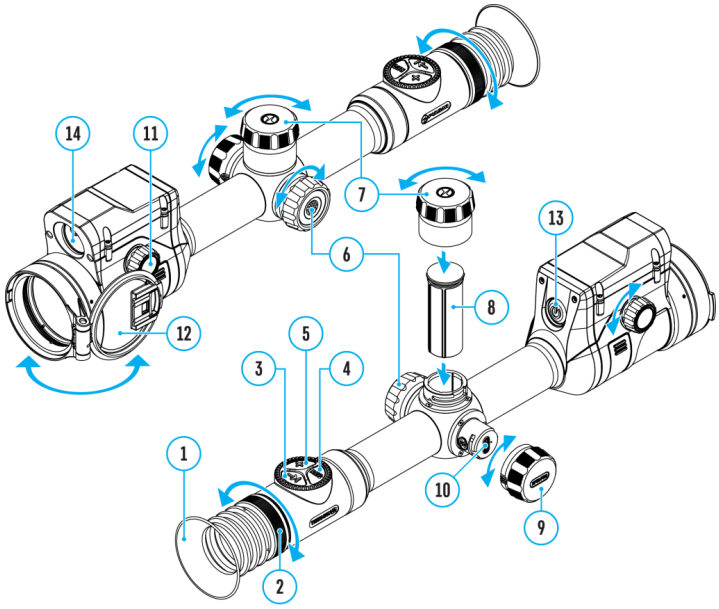

This section contains parameters for the ballistic calculator in the riflescope.

1. Enter the main menu with a long press of the controller button **(6)**.
2. Rotate the controller ring **(6)** to select the submenu **Ballistics** .
3. Enter the submenu with a short press of the controller button **(6)**.
4. Rotate the controller ring **(6)** to select the desired menu item.

Ballistics Activation

The Ballistic calculator function shows the recommended aiming point and correction values. For more information on using the function, see the section **Ballistic Calculator.**

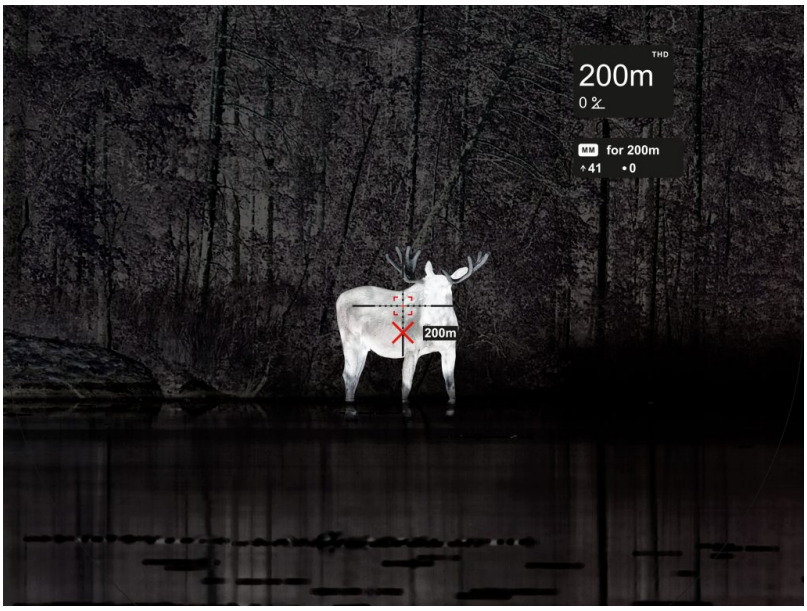

1. Rotate the controller ring **(6)** to select **Ballistics Activation** .
2. Turn the Ballistic Calculator on/off with a short press of the controller button **(6)**.

Auxiliary Indication of Distance

The “Auxiliary indication of distance” function shows an additional window with the result of measuring the distance near the reticles of the rangefinder or ballistic calculator.

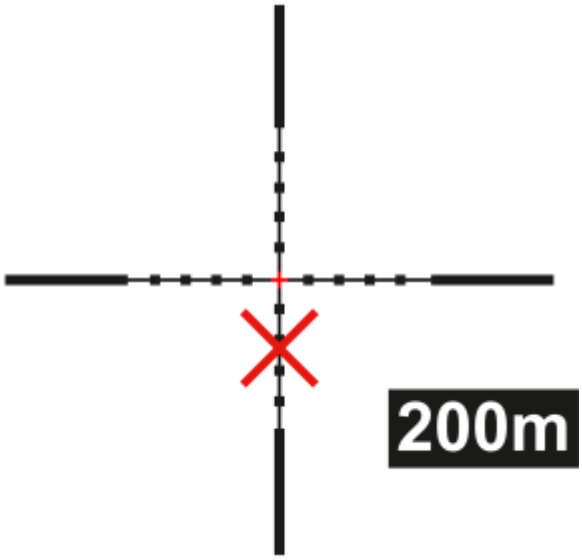

1. Rotate the controller ring **(6)** to select **Auxiliary indication of distance** .
2. Press briefly the controller button **(6)** to enter submenu.
3. Rotate the controller ring **(6)** to select the display mode: Off, Bound to reticle mark or Bound to SPOA mark.
4. Confirm selection with a brief press of the controller button **(6)**.

SPOA Mark Type

1. Rotate the controller ring **(6)** to select the **SPOA Mark Type** menu item.

2. Press briefly the controller button **(6)** to enter submenu.
3. Rotate the controller ring **(6)** to select one of the three reticle shapes for the suggested point of aiming .
4. Confirm selection with a brief press of the controller button **(6)**.
5. The selected reticle will appear on the display when using the **Ballistic Calculator.**

Notes:

- MilLine is a line with 1 mil grooves. It scales as the magnification changes. It is designed for shooting with aiming off for adjustment depending on wind direction: the entire line moves vertically. As for the horizontal direction, you can navigate by grooves. If the weather correction function is turned on, the cross on the line will also move to the side.

SPOA Mark Color

1. Rotate the controller ring **(6)** to select the **SPOA Mark Color** menu item.
2. Press briefly the controller button **(6)** to enter submenu.
3. Rotate the controller ring **(6)** to select one of color combinations for the suggested point of aiming.
4. Confirm selection with a brief press of the controller button **(6)**.

Ballistic Calculator Units

In this item, you can change or disable the units for the ballistic calculator corrections.

1. Rotate the controller ring **(6)** to select the **Ballistic Calculator Units** menu item.
2. Briefly press the controller button **(6)** to enter the submenu.
3. Rotate the controller ring **(6)** to select one of the three units (MOA, MRAD, Click) or Off to disable the units.
4. Confirm your selection with a brief press of the controller button **(6)**.

Rangefinder

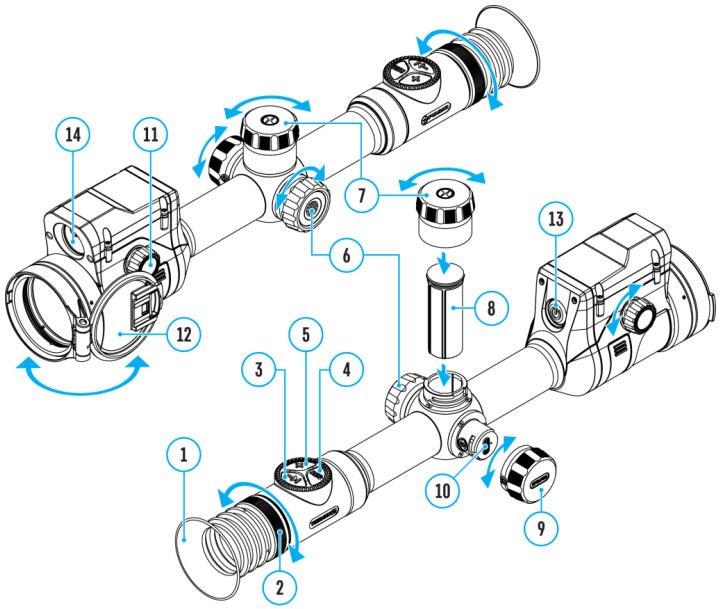

Menu item Rangefinder allows you to set up built-in rangefinder's parameters as follows:

1. Enter the main menu with a long press of the controller button **(6)**.
2. Rotate the controller ring **(6)** to select the submenu **Rangefinder** LRF .
3. Enter the submenu with a short press of the controller button **(6)**.
4. Rotate the controller ring **(6)** to select the desired menu item.

Reticle Type

1. Rotate the controller ring **(6)** to select the **Reticle Type** menu item.
2. Press briefly the controller button **(6)** to enter submenu.
3. Rotate the controller ring **(6)** to select one of the three reticle shapes .
4. Confirm selection with a brief press of the controller button **(6)**.
5. The selected reticle will appear on the display.
6. The reticle will disappear from the display if the rangefinder is not used longer than 4 seconds.

TPA

Function "TPA" (Target Position Angle) allows you to measure the angle of target location (angle of elevation). When the function is activated, the angle is shown continuously.

1. Rotate the controller ring **(6)** to select **TPA** .
2. Turn **TPA** on/off with a short press of the controller button **(6)**.

THD

“THD” (True Horizontal Distance) function allows you to measure true horizontal distance to a target based on the angle of elevation value.

1. Rotate the controller ring **(6)** to select **THD** .
2. Turn **THD** on/off with a short press of the controller button **(6).**
3. Hereinafter the message **THD** will appear above the distance readings.

Calibration Mode

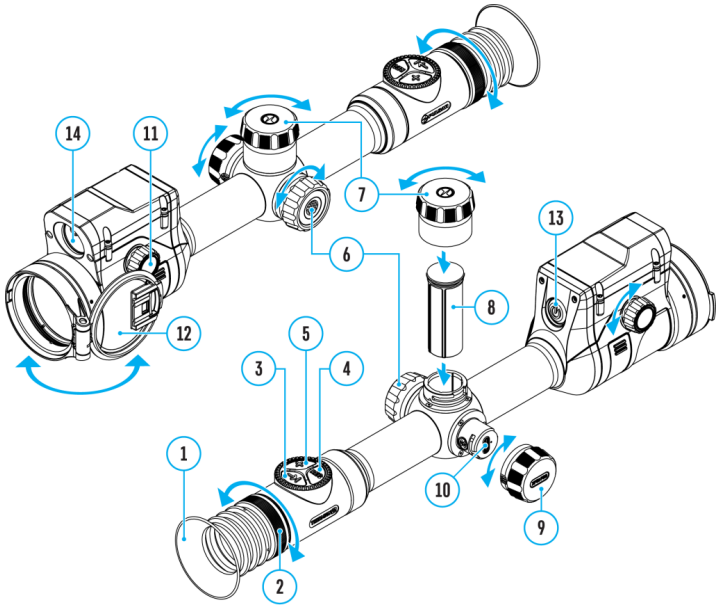

Calibration mode selection.

Calibration eliminates image flaws (such as vertical bars, phantom images, grainy field of view, etc.) by equalizing the microbolometer background temperature.

There are three calibration modes: **manual, semi-automatic** and **automatic**.

The selected calibration mode is displayed in the status bar (see **Status Bar** section).

Select the required mode in the Calibration Mode item:

1. Press and hold the controller button **(6)** to enter the main menu.
2. Rotate the controller ring **(6)** to select the **Calibration Mode** menu item.
3. Press the controller button **(6)** briefly to enter the Calibration Mode submenu.
4. Rotate the controller ring **(6)** to select one of the calibration modes described below.
5. Press the controller button **(6)** briefly to confirm your selection.

M mode (manual)

- Close the lens cover **(12)** and press the **ON/OFF (13)** button briefly.
- Open the cover after the calibration is completed.

SA mode (semi-automatic)

- The user independently determines the need for calibration (according to the image being observed).
- Press the **ON/OFF (13)** button briefly to activate calibration.
- There is no need to close the lens cover (internal shutter covers the microbolometer).

A Mode (automatic)

- The riflescope is calibrated autonomously according to the software algorithm.
- There is no need to close the lens cover (internal shutter covers the microbolometer).
- In this mode, the riflescope may be calibrated by the user with the **ON/OFF (13)** button.
- A countdown timer :05 will appear instead of the calibration icon when in automatic calibration mode with 5 seconds remaining until automatic calibration.

Notes:

- During calibration, the image on the display briefly freezes for up to 1 second.
- The selected calibration mode is saved after restarting the device.

General Settings

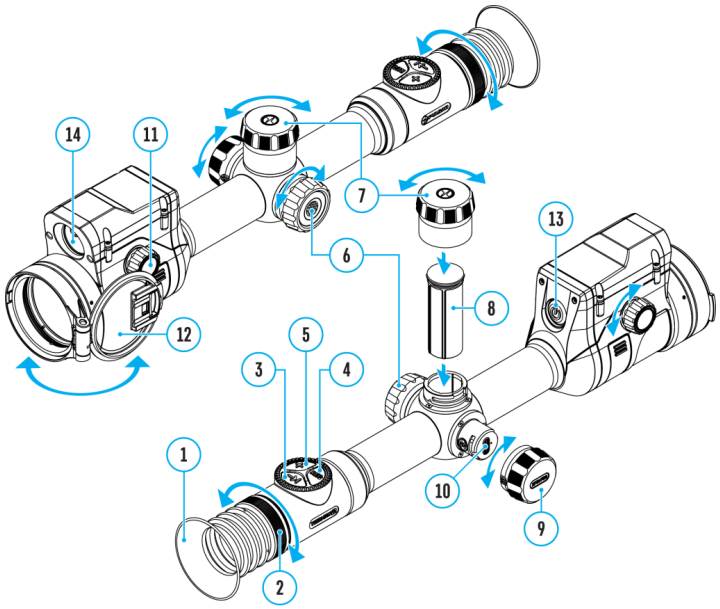

1. Press and hold the controller button **(6)** to enter the main menu.
2. Rotate the controller ring **(6)** to select the **General settings** menu item.

3. Press the controller button **(6)** briefly to enter the submenu.
4. Rotate the controller ring **(6)** to select the desired menu item.

This menu item allows you to configure the following settings:

Language

Language selection:

1. Press the controller button **(6)** briefly to enter the **Language** submenu.
2. Rotate the controller ring **(6)** to select one of the available interface languages: English, German, Spanish, French, Russian, Italian, Portuguese, Dutch, Danish, Norwegian, Swedish, Polish, Czech, Hungarian, Bulgarian, Finnish, Lithuanian, Latvian, Ukrainian.
3. Confirm your selection with a short press of the controller button **(6)**.
4. Press and hold the controller button **(6)** to save your selection and exit from the submenu.

Date

Date Setting:

1. Press the controller button **(6)** briefly to enter the **Date** submenu. The date is displayed in dd/mm/yyyy format.
2. Rotate the controller ring **(6)** to select the desired year, month and date. Press the controller button **(6)** briefly to switch between digits.
3. Press and hold the controller button **(6)** to save your selected date and exit from the submenu.

Time

Time Setting:

1. Press the controller button **(6)** briefly to enter the **Time** submenu.
2. Rotate the controller ring **(6)** to select the time format – 24 or AM/PM.
3. Press the controller button **(6)** to proceed to the hour setting.
4. Rotate the controller ring **(6)** to select the hour value.
5. Press the controller button **(6)** to proceed to the minute setting.
6. Rotate the controller ring **(6)** to select the minutes value.
7. Press and hold the controller button **(6)** to save your selected time and exit from the submenu.

Units of Measure

Units of measurement selection:

1. Press the controller button **(6)** briefly to enter the **Units of Measure** submenu.
2. Rotate the controller ring **(6)** to select the unit of measurement – meters or yards, press the controller button **(6)**.
3. Return to submenu will happen automatically.

Video Compression

When set to ON, standard video compression is applied so the video file size is reduced.

When set to OFF, minimal video compression is applied. In this case, the quality of the recorded video is better, but its size is significantly increased.

Warning! Larger video file sizes result in shorter recording times. This may lead to longer download times for video files through the Stream Vision 2 app.

Enable/disable video compression:

1. Rotate the controller ring **(6)** to select the **Video Compression** menu item.
2. To turn on video compression, briefly press the controller button **(6)**. ON
3. To turn off video compression, briefly press the controller button **(6)**. OFF

Advanced recording

The **Advanced recording** function provides extended options for automatic video capture.

Shadow recording

When active, pressing the **REC (4)** button saves a video file starting **30 seconds before** the button was pressed and continues until recording 00:30 is stopped. To stop recording, press and hold the **REC (4)** button.

1. Enter **General settings** → **Advanced recording**
2. Rotate the controller ring **(6)** to select **Shadow recording** .
3. Press the controller button **(6)** to turn the function on/off.

Recoil recording

When recoil-activated recording 00:30 is enabled, video recording starts **30 seconds before the first** detected shot and ends **30 seconds after the last shot**.

If additional shots are detected during recording, the recording continues in the same file, and the duration is extended by 30 seconds from each subsequent shot. The maximum

length of a single video file is 5 minutes.

1. Enter **General settings** ⚙ **→ Advanced recording** 🎥 .
2. Rotate the controller ring **(6)** to select **Recoil recording** REC .
3. Press the controller button **(6)** to open the submenu.
4. Rotate the controller ring **(6)** to select one of the options: **Off, High sensitivity, Medium sensitivity, Low sensitivity**.
5. Press the controller button **(6)** briefly to confirm.

Note:
To select the appropriate sensitivity level, it is recommended to make a test shot, for example, at a shooting range.

- If **Recoil recording** does not activate when firing, increase the sensitivity level.
- If recording starts automatically when shaking the weapon, decrease the sensitivity level.

Defective Pixel Repair

When using the device, defective (dead) pixels may appear on the microbolometer. These are bright or dark points of a constant brightness that are visible on the image.

Defective pixels on the microbolometer can increase in size relative to the digital-zoom power.

The **Thermion 2 LRF Pro** thermal riflescope allows the user to remove any defective pixels on the display, as well as cancel removal, via the device's firmware.

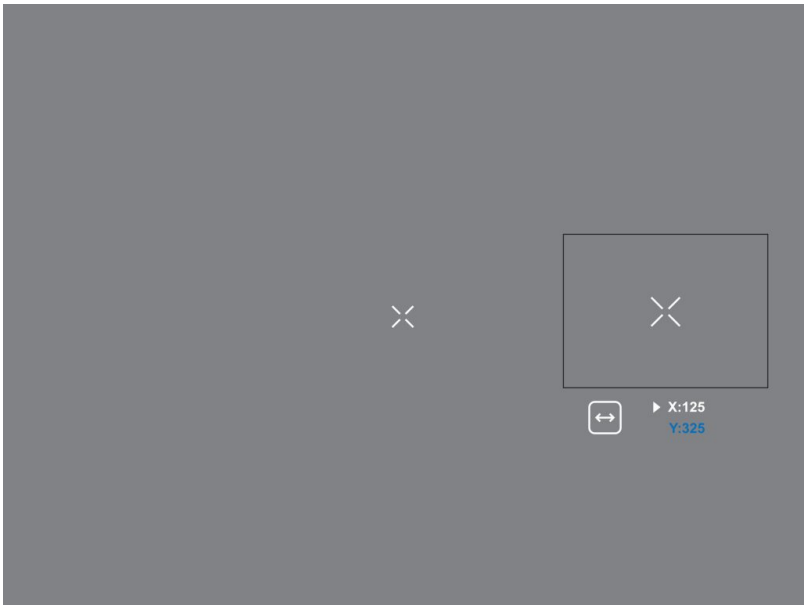

Step 1. Enter the menu to fix the defective pixels

1. Rotate the controller ring **(6)** to select the **Defective Pixel Repair** menu item.

2. Press the controller button **(6)** to open the submenu.
3. Press the controller button **(6)** briefly to select the icon .

Step 2. Select the defective pixel

1. A marker will appear in the centre of the display. A “magnifying glass” will appear on the right side of the display — a rectangle with an enlarged view of the marker for precise pixel selection — and marker coordinates under the “magnifying glass” X:125 Y:325.
2. Rotate the controller ring **(6)** to move the marker to align its center with the defective pixel.
3. Press the controller button **(6)** shortly to switch the marker direction from the horizontal to the vertical and vice versa.
4. Rotate the controller ring **(6)** to align the defective pixel with the fixed cross in the frame – the pixel should disappear.

Step 3. Remove the defective pixel

1. Delete the defective pixel with a short press of the **ON/OFF (13)** button.
2. Where the pixel has been successfully deleted, the *OK* message will appear on the screen for a short time.
3. Then, by moving the marker across the display, you can delete the next defective pixel.
4. Press and hold the controller button **(6)** to exit the Defective Pixel Repair function.

Restore Default Pixel Map

This option allows the user to return all previously disabled defective pixels to their original state.

1. Rotate the controller ring **(6)** to select the **Defective Pixel Repair** menu item.
2. Press the controller button **(6)** to open the submenu.
3. Rotate the controller ring **(6)** to select the **Restore Default Pixel Map** icon.
4. Activate the function by briefly pressing the controller button **(6).**
5. Rotate the controller ring **(6)** to select *Yes* if you want to return to the factory pixel map or select *No* if you do not.
6. Confirm your selection with a short press of the controller button **(6)**.

Attention! One or two pixels on the display of the device in the form of bright white, black or colored (blue, red or green) points may appear. These points cannot be removed and are not a defect.

Auto Shutdown Options

1. Rotate the controller ring **(6)** to select **Auto Shutdown Options** .
2. Press the controller button **(6)** to enter the submenu.

If device inactive for 30 min

When this feature is enabled, the device automatically turns off after 30 minutes of inactivity Display off mode.

1. Rotate the controller ring **(6)** to select **If device inactive for 30 min** .
2. Press controller ring **(6)** to select *On* for turning on the function or *Off* for turning it off.

If in idle position

1. Rotate the controller ring **(6)** to select **If in idle position** .
2. Press the controller button **(6)** to enter the submenu.
3. Rotate the controller ring **(6)** to select the time period **(1 min, 3 min, 5 min)** upon expiry of which the riflescope will automatically shut down, or select **Switch off** if you wish to deactivate Auto Shutdown.
4. Confirm your selection with a short press of the controller button **(6)**.

Note: If the automatic shutdown function is activated, the status bar shows an icon and shutdown time period as 1/3/5 min.

Side Incline

This item allows you to activate or deactivate the “sector” arrows on the sides of the display. These arrows show the direction in which your rifle scope should be rotated to eliminate incline.

There are three modes of incline:

- 5°-10° – one sector arrow;
- 10°-20° – two sector arrow;
- > 20° – three sector arrow.

A side incline of less than 5° is not displayed.

1. Rotate the controller ring **(6)** to select **Side Incline** →← .
2. Press controller ring **(6)** to select *On* for turning on the incline indication or *Off* for turning it off.

Default Settings

1. Press the controller button **(6)** briefly to enter the **Default Settings** ⮌ submenu.
2. Rotate the controller ring **(6)** to select *"Yes"* to restore default settings or *"No"* to cancel the action.
3. Confirm your selection with a short press of the controller button **(6)**.

- If *"Yes"* is selected, display will show *"Do you want to restore default settings?"* with *"Yes"* and *"No"* dialogue options. Select *"Yes"* to restore default settings.
- If *"No"* option is selected: the action will be aborted and you will return to the submenu.

The following settings will be returned to their defaults:

- **Video Recorder Mode** – Video
- **Amplification Level** – High
- **Smoothing Filter** – Off
- **Calibration Mode** – automatic
- **Interface Language** – English
- **Wi-Fi** – Off (unique password)
- **Magnification** – initial value
- **PiP** – Off
- **Color Mode** – White hot
- **Units of Measurement** – metric
- **Side Incline** – On
- **Zeroing Profile** – A
- **Reticle selection from the riflescope's memory** – M56Fi
- **Video Compression** – Off

- **WiFi Band –** 2.4 GHz
- **Ballistic calculator** – On
- **Ballistic calculator units** – MOA
- **Display dimming** – Off
- **Auto shutdown if device inactive for 30 min** – On

Attention! After restoring default settings, the date, time and user pixel map as well as the zeroing profiles data entered by the user are saved.

Format

This menu option allows you to format the device's memory card. All files will be deleted.

Formatting should be carried out in case of a memory card error.

Before formatting, make sure you transfer all footage to other media.

1. Press the controller button **(6)** briefly to enter the **Format** submenu.
2. Rotate the controller ring **(6)** to select *"Yes"* to format the memory card, or *"No"* to return to the submenu.
3. Confirm your selection by pressing the controller button **(6)**.

- If *"Yes"* is selected, display will show *"Do you want to format memory?"* with *"Yes"* and *"No"* dialogue options. Select *"Yes"* to format the memory card.
- If *"No"* option is selected: formatting is cancelled and return to the submenu.

Device Information

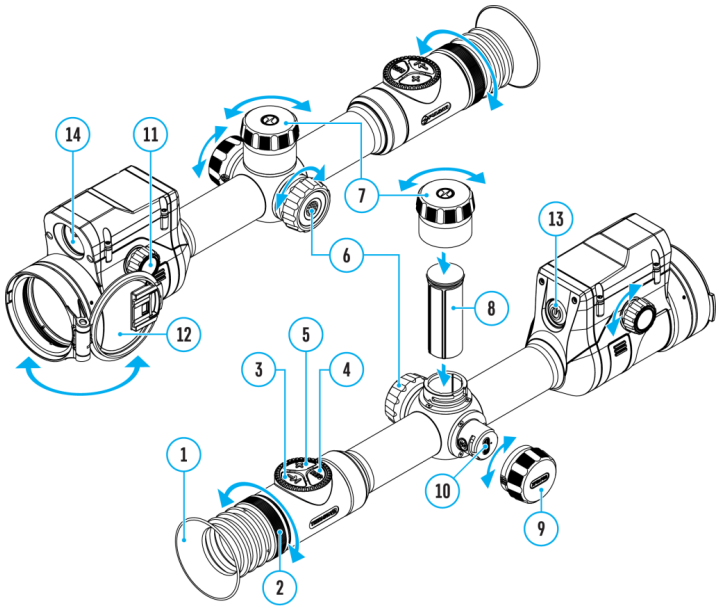

1. Press and hold the controller button **(6)** to enter the main menu.
2. Rotate the controller ring **(6)** to select the **Device Information** ⓘ menu item.
3. Press the controller button **(6)** briefly to enter the Device Information submenu.

This item allows the user to view the following information about the riflescope:

- Full name of the riflescope
- SKU number
- Serial number of the riflescope
- Riflescope firmware version
- Hardware version
- Service information
- Battery information

Functions

Amplification Level

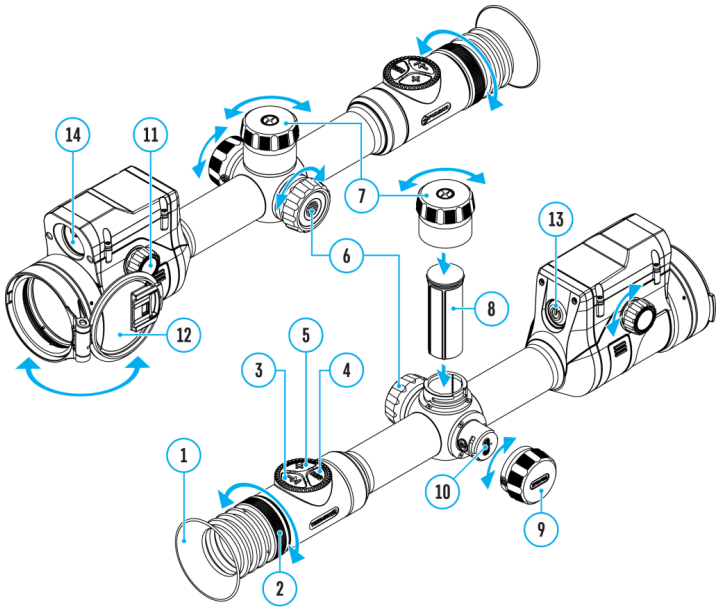

Sensitivity enhancement levels (Normal, High, Ultra) are software algorithms that enhance the quality of detection and recognition in various observation conditions. When the temperature contrast decreases (fog, precipitation, high humidity), it is recommended to increase the amplification level. To optimize the image, activate the Smoothing Filter in the main menu.

Normal

High

Ultra

1. Press and hold the controller button **(6)** to enter the quick menu.
2. By short pressing the controller button **(6)** select the menu item **Amplification level** .
3. Rotate the controller ring **(6)** to select one of the levels: Normal N, High H, Ultra U.
4. Press and hold the controller button **(6)** to exit the menu or wait for 3 seconds to exit automatically.

Video Recording and Photography

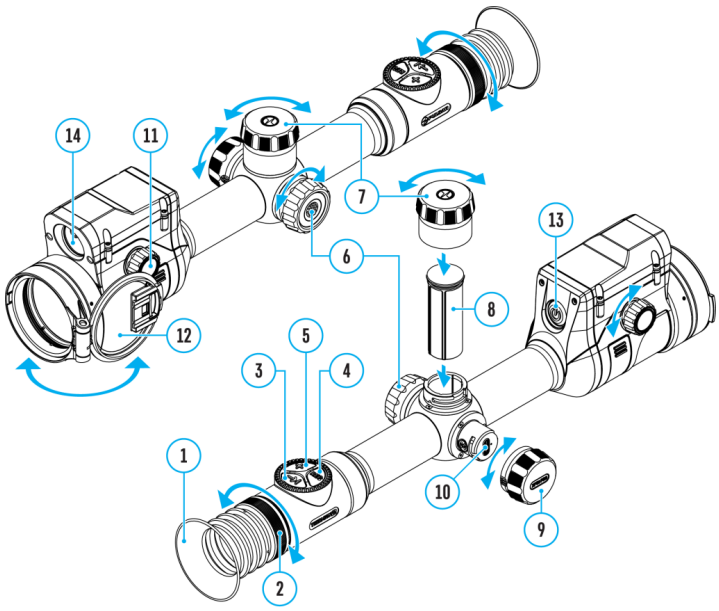

The riflescope is capable of video recording and photography. Videos and images are saved on the built-in memory card.

Before using the photo and video functions, read the **Date** and **Time** subsections of the **General Settings** section.

For information on how to watch recorded photos and videos, see the Stream Vision 2 user manual: Android, iOS.

The built-in recorder operates in two modes **– Video** and **Photo.**

Video mode. Video recording

1. Switch to **Video** mode by pressing and holding the **REC (4)** button.

2. The icon and the remaining recording time in HH:MM (Hours:Minutes) format are displayed in the upper left corner, for example 4:20.

3. Press the **REC (4)** button briefly to start video recording.

4. When the video recording starts, the icon will disappear and the REC icon and timer in MM:SS (Minutes:Seconds) format will appear **0:03**.

5. Pause and resume recording video with a short press of the **REC (4)** button.

6. Stop recording video with a long press of the **REC (4)** button.

7. Video files are saved to the built-in memory card after the video recording has been stopped.

8. Press and hold the **REC (4)** button to switch between the **Video** and **Photo** modes (Video→ Photo→ Video...)

Photo Mode. Capturing an image

1. Switch to the **Photo** mode by pressing and holding the **REC (4)** button.

2. Press the **REC (4)** button briefly to take a photo. The icon flashes – the photo file is being saved to the built-in SD card.

Video files are stored in the built-in memory card:

- After turning off the video recording;

- Upon powering the riflescope off if recording was on;
- When the memory card is overfilled during recording (Memory Full message appears on the display).

Notes:

- You can enter and navigate the menu during video recording.
- Recorded videos and photos are saved to the built-in memory card of the riflescope in the format img_xxx. jpg (for photos); video_xxx. mp4 (for video).
- Videos are recorded in clips with a maximum duration of 5 minutes. The number of recorded files is limited by the capacity of unit's internal memory.
- Regularly check free memory within the built-in memory card and move the footage to other storage media to free up the memory card space.
- In case of a memory card error, you can use the format function in the **General Settings** section of the main menu.
- When the Display Off function is activated, video recording continues to run in the background.
- For automated recording of shots, activate **Recoil recording** in **General Settings** **→ Advanced recording** .
- To avoid missing the recording of an important event, activate **Shadow recording** in **General Settings** **→ Advanced recording** . In this mode, video recording starts 30 seconds before you press the REC button.

Laser Rangefinder

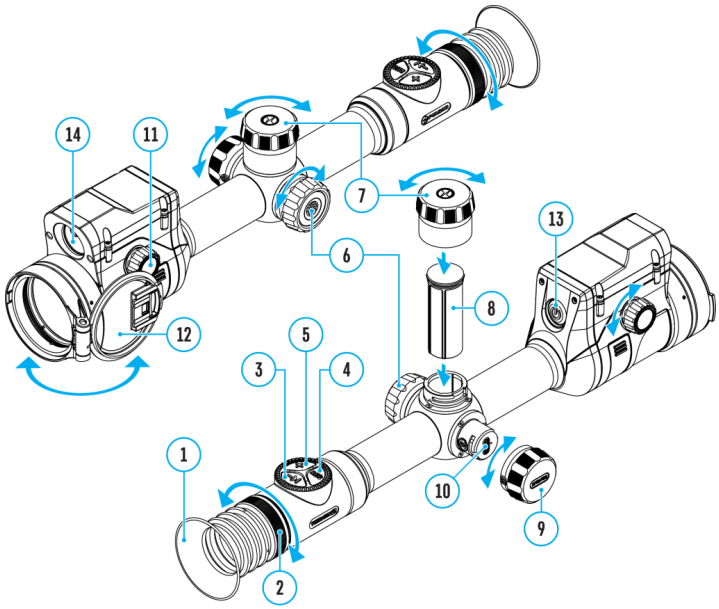

The riflescope is equipped with a built-in rangefinder **(14)**, allowing you to measure distance to objects up to 800 m away.

How the rangefinder works:

1. Turn on the riflescope, adjust image according to section Powering on and Image Setting.

2. Briefly press the **LRF (3)** button to activate the rangefinder. The rangefinder reticle will appear in the centre of the image.

3. Point the rangefinding reticle at an object and press **LRF (3)** button. In the top right corner of the display you will see distance in meters (or yards – depending on settings).

Notes:

- If the rangefinder is idle longer than three seconds, it turns off automatically.

- The point of aiming of the rangefinding reticle and the aiming reticle might not coincide due to aiming reticle shift after zeroing.
- To see the recommended aiming point while measuring the distance, activate the Ballistic Calculator.

Operation in SCAN mode:

1. Turn on the rangefinder by briefly pressing the **LRF (3)** button.

2. Hold down **LRF (3)** button for longer than two seconds. Measurement readings will be changing in real time as you point the riflescope at different objects. In the top right corner a message **SCAN** appears.

3. In case of unsuccessful measurement dashes will appear on the display.

4. To turn off the rangefinder hold the **LRF (3)** button.

Notes:

- To select a rangefinding reticle, please go to submenu Rangefinder in the main menu.
- To select units of measurement (meters or yards) go to submenu General Settings in the main menu.

Additional Information:

- Accuracy of measurement and maximum range depend on the reflection ratio of the target surface, the angle at which the emitting beam falls on the target surface and environmental conditions. Reflectivity is also affected by surface texture, color, size and shape of the target. A shiny or brightly colored surface is normally more reflective than a dark surface.

- Accuracy of measurement can also be affected by light conditions, fog, haze, rain, snow etc. Ranging performance can degrade in bright conditions or when ranging towards the sun.
- Measuring range to a small sized target is more difficult than to a large sized target.

Ballistic Calculator

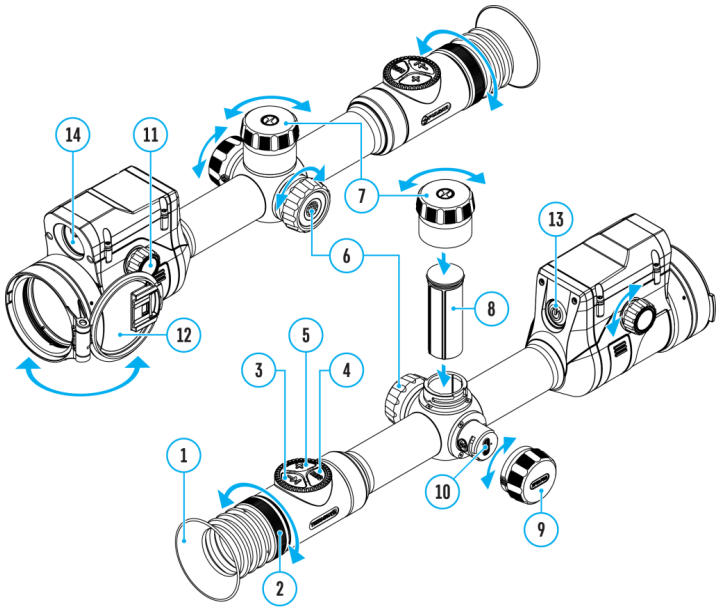

1. Install the Stream Vision Ballistics app from **Google Play** or **AppStore**.

2. Go to Profiles tab.

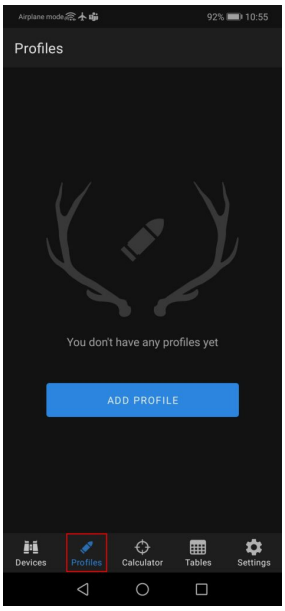

3. Create a profile for your riflescope, ammunition and zeroing distance. Make sure that “Ballistic parameters” switch is on. If your ammo is not on the list, you can enter its parameters manually. The more parameters you specify, the more accurate the recommended point of aiming will be.

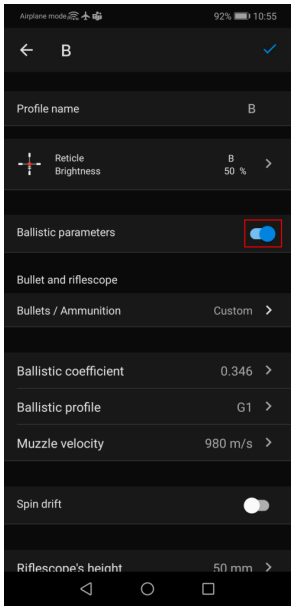

4. Adjust the temperature, pressure and humidity of the environment while zeroing your riflescope.

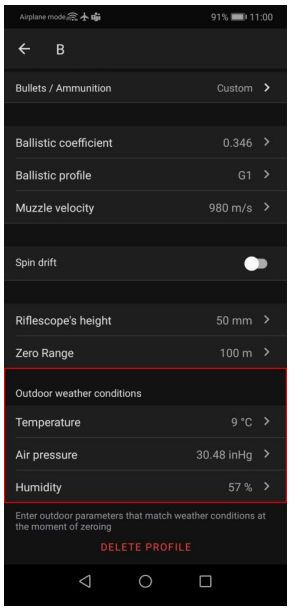

5. Enter a profile name and click save .

6. Connect your riflescope to your smartphone using Bluetooth. First, make sure that your riflescope has the latest firmware version 3.0 or higher installed.

7. Load the profile into the riflescope.

To do this, go to the “Devices” tab ⟶ Select your riflescope ⟶ “All device profiles” → click on the profile you want to replace and select the created profile from the list.

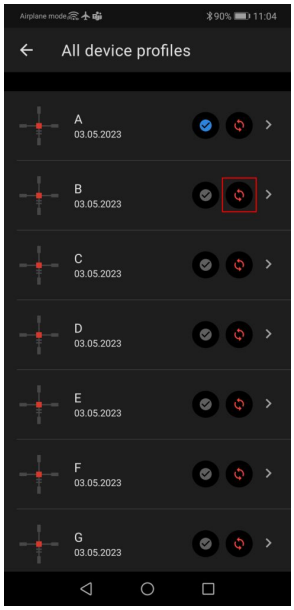

8. Set the status to “Active” for the ballistic profile. To do this, click on the button next to the desired profile, or select it in the profile selection menu in the riflescope.

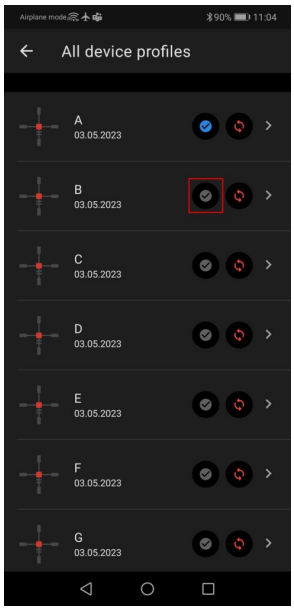

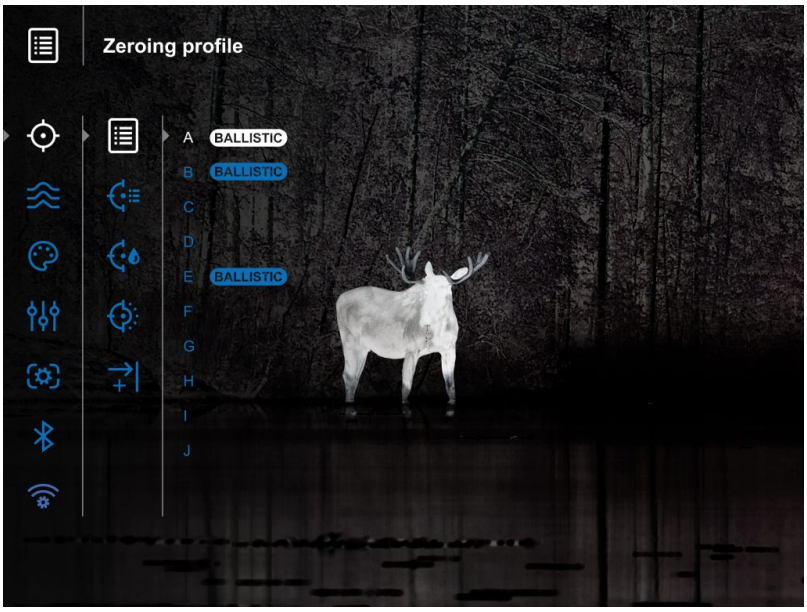

9. Make sure that the Ballistic Activation option is enabled in the riflescope's **Ballistics** menu.

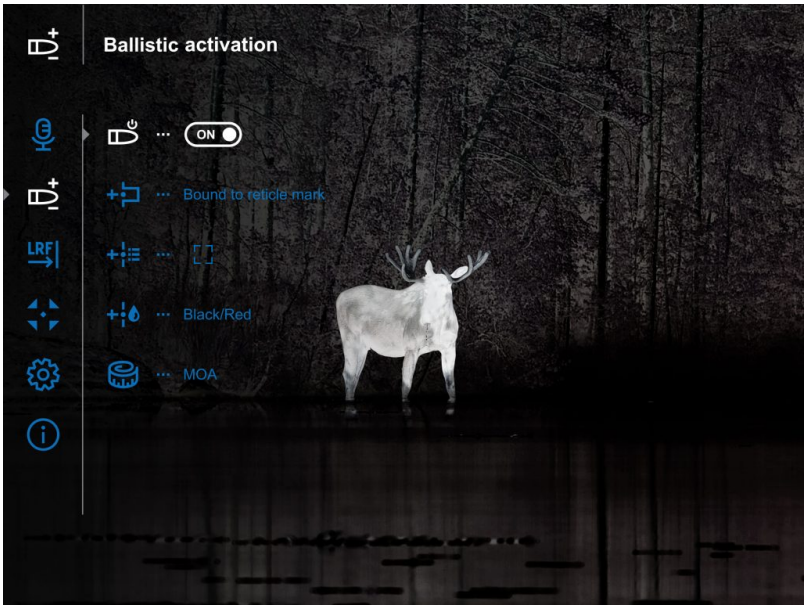

10. Briefly press the **LRF (3)** button to activate the rangefinder in the riflescope.

11. Point the rangefinder reticle at the object and press the **LRF (3)** button. The screen will display the recommended aiming point ✕ and correction values in the upper right corner.

You can also use ballistic calculator in the rangefinder SCAN mode by briefly pressing the **LRF (3)** button. In this mode, the target distance widget near the reticle cannot be disabled in the main menu, it is always displayed.

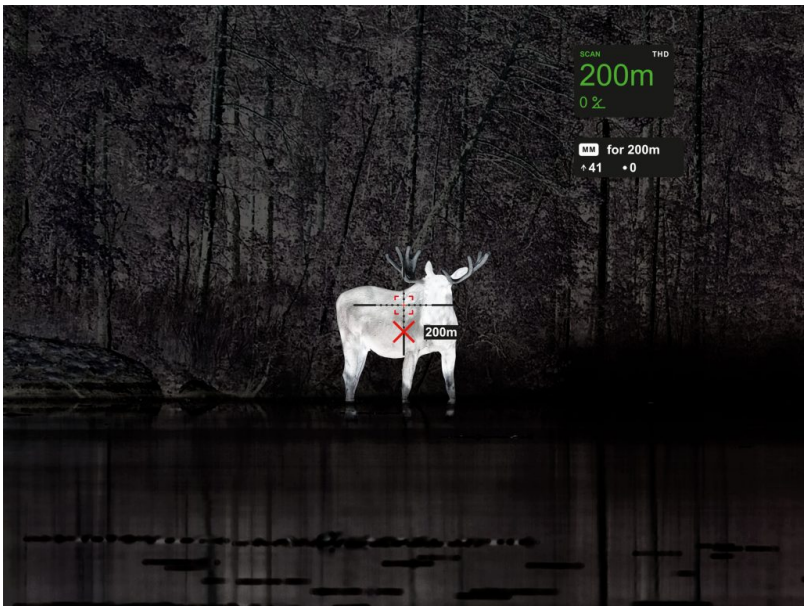

12. To manually adjust the ballistic calculator, select the desired distance in the quick menu:

- Press the controller button **(6)** briefly to enter the quick menu.
- Briefly press the controller button **(6)** to select .
- Rotate the controller ring **(6)** to select the desired distance.
- Press and hold the controller button **(6)** to exit the menu or wait 10 seconds to exit automatically.

13. Check the accuracy of your profile settings with a test shot at the shooting range.

Note: profiles for different types of ammunition must be zeroed separately.

14. To activate the use of weather data in your geolocation during the shot, go to the "Devices" tab → Select your riflescope → "Set outdoor".

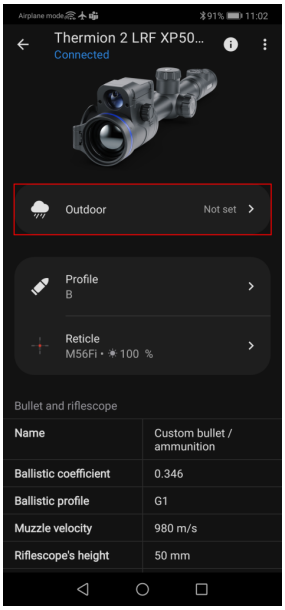

In the **Ballistics** section of the main menu, you can configure the following settings of the ballistic calculator:

- Screen position of the measured distance value
- Turn on/off the ballistic calculator
- Correction units
- Reticle type and color for suggested point of aiming.

Stream Vision Ballistics Manual

Android

iOS

Discrete Digital Zoom

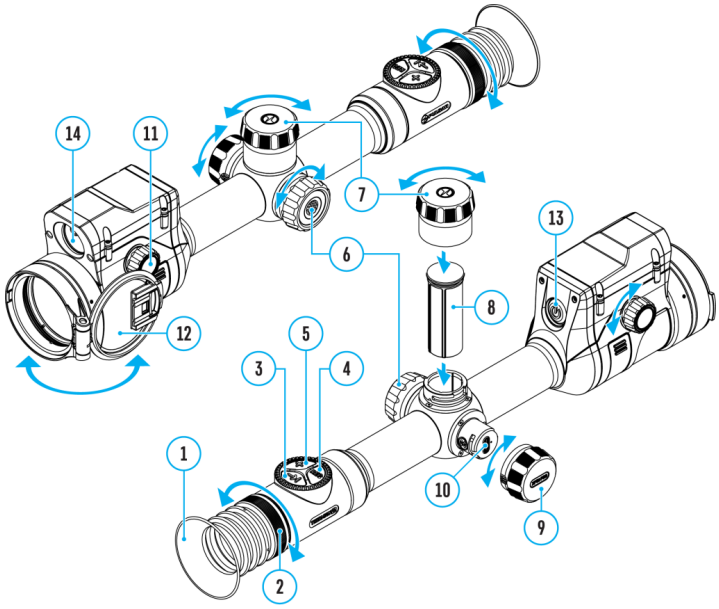

Discrete digital zoom allows you to quickly increase the basic magnification (see **Magnification** line in the table of **Technical Specifications**) by 2, 4 or 8 times, as well as return to the basic magnification.

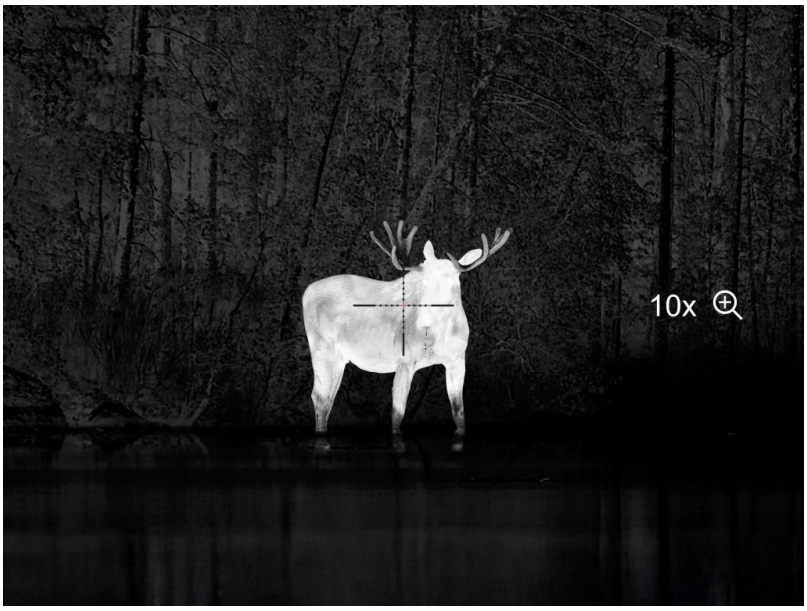

When **“Zoom activation with button”** function in the **User settings** submenu is on:

- Press the **ZOOM (5)** button successively to change the magnification ratio of the riflescope.
- While the icon is visible on the screen, rotate the controller ring **(6)** for smooth digital zooming from the current magnification.

When **“Zoom activation with button”** function is off:

- Rotate the controller ring **(6)** for smooth digital zooming from the current magnification.
- Press the **ZOOM (5)** button successively to change the magnification ratio of the riflescope. Then, rotate the controller ring for more precise zoom adjustment.

Notes:

- The magnification value is reset to the base value when the device is switched off.
- To save zoom after shutting down the device, activate the function in the **User settings** submenu of the main menu.

PiP Function

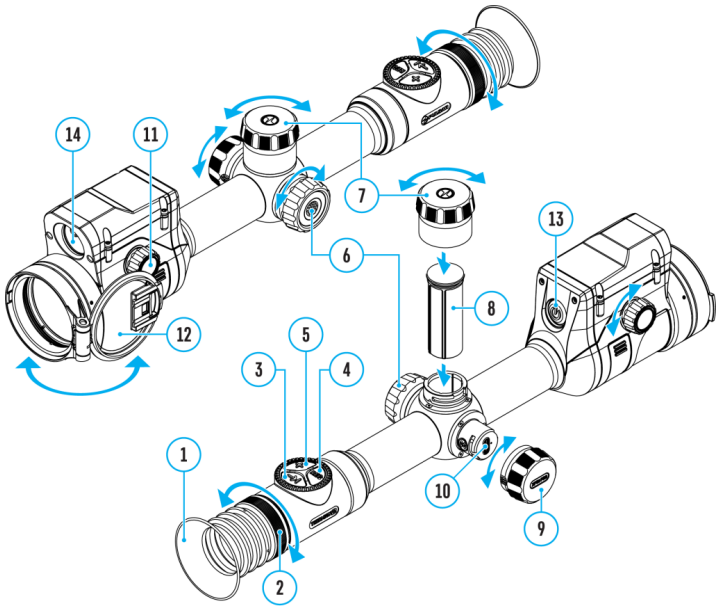

The PiP function (Picture-in-Picture) allows you to see both a magnified image in a particular dialog box and the main image.

1. Press and hold the **ZOOM (5)** button to turn on/off the PiP function.
2. To change the digital zoom in the PiP window, briefly press the **ZOOM (5)** button or rotate the controller ring **(6)** until the icon is visible on the screen .
3. The magnified image is displayed in a particular dialog box, with the full magnification being used.
4. The rest of the image is displayed only with the optical zoom (digital zoom is off).
5. When PiP is turned off, the display shows the full magnification set for the PiP mode.

Wi-Fi Function

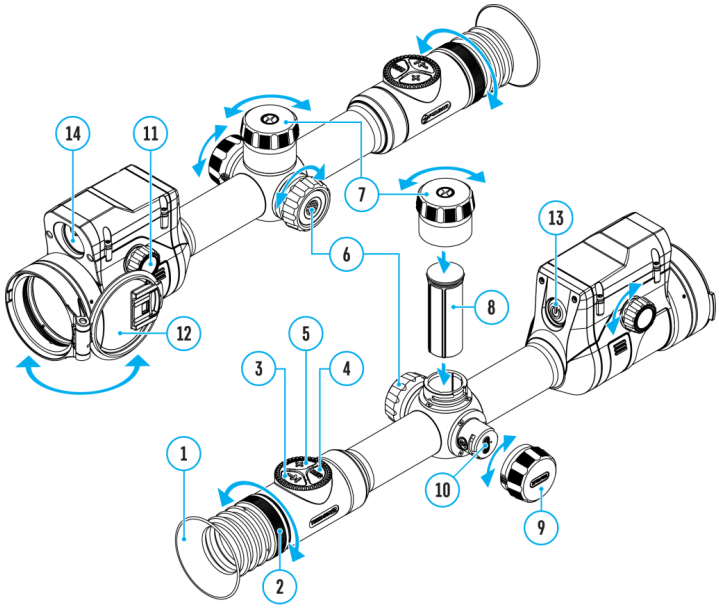

The riflescope has a function for wireless communication with mobile devices (smartphone or tablet) via Wi-Fi.

1. To enable the wireless module, enter the main menu by long pressing the controller button **(6)**.
2. Rotate the controller ring **(6)** to select the **Wi-Fi Activation** menu item.
3. Press the controller button **(6)** briefly to turn on/off the Wi-Fi module.

Wi-Fi is displayed in the status bar as follows:

Indication in the Status Bar	Connection Status
	Wi-Fi is switched off
	Wi-Fi is switched on by the user, Wi-Fi connection in the riflescope is in progress.
	Wi-Fi is switched on, there is no connection to the riflescope

Wi-Fi is switched on, there is connection to the riflescope

- An external device recognizes the riflescope under the name Thermion2_XXXX, where XXXX are the four last digits of the serial number.
- After entering the password on a mobile (see **Password Setup** subsection of the **Wi-Fi Settings** section for more information on setting a password) and setting up a connection, the icon in the riflescope status bar will change to .
- Launch Stream Vision 2 application on your mobile device (see **Stream Vision 2** section).
- Video broadcasting on a mobile screen starts after the viewfinder button on the mobile screen is activated.
- The Wi-Fi function will turn off automatically if there is not enough battery power for Wi-Fi. To use the Wi-Fi function again, you need to charge the batteries.
- When Wi-Fi is on, the power supply will switch to the internal battery after the external battery reaches a 20% charge level.

Scalable Reticles

This function is designed to preserve ballistic properties of the scalable reticles X51Fi-300, M56Fi, M57Fi for all magnifications.

1. Enter the main menu with a long press of the controller button **(6)**.
2. Enter submenu **Reticle & zeroing** → Reticle Type .
3. Select the reticle X51Fi-300, M56Fi, M57Fi.

Notes:

- When zooming in and out the image, the selected reticle on the display and in the recorded video changes its geometrical size according to the magnification selected.
- The reticle scale changes both on the main display and in the PiP mode.

Display-Off Function

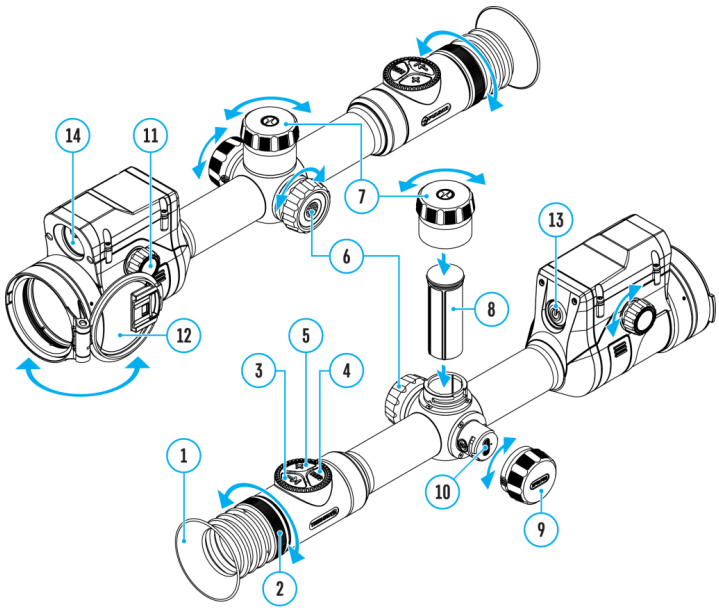

This function darkens the screen, which aids the user's concealment. However, the device stays on.

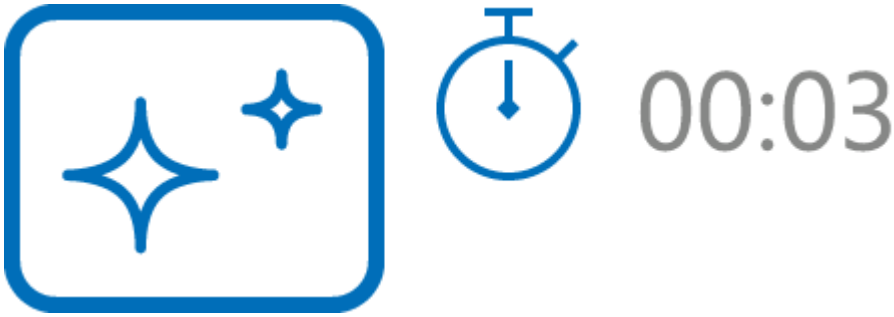

1. When the device is on, press and hold the **ON/OFF (13)** button for less than 3 seconds. The display will turn off, the current time and the **"Display off"** icon will appear.
2. Press the **ON/OFF (13)** button briefly to turn on the display.
3. When you press and hold the **ON/OFF (13)** button, the display shows the icon **"Display off"** with a countdown. Holding the button down for the duration of the countdown will power the device off completely.

Wireless Remote Control

Descriptions of Controls

The wireless remote control duplicates the functions of turning off the device, turning off the display, calibration, digital zoom, rangefinder control, switching amplification levels, and it allows navigation through the menu.

Attention! The adhesive layer of the remote control mounting tape is intended for metal, glass, and most plastics. On wooden surfaces with coatings (varnish, oil, etc.), removal may cause damage. Use on such materials is not recommended.

		Controller (20)	Button (21)	Button (22)	Button (23)
Short press		Enter the quick menu and submenus of the main menu / confirm the selection / Switch to the next item of the quick menu	Turn the display on / Calibrate the microbolometer	Control discrete digital zoom	Activate rangefinder / Measure distance
Long press		Enter/exit the main menu / Exit the quick menu	Turn the display off / Turn the device off	PiP on/off	Switching color palletes
Double press					Disable SPOA of ballistic calculator
Clockwise rotation	**Quick menu**	Increase parameter			
	Main menu	Navigate downwards/clockwise			

Counter-clockwise rotation	**Quick menu**	Decrease parameter
	Main menu	Navigate upwards/counterclockwise

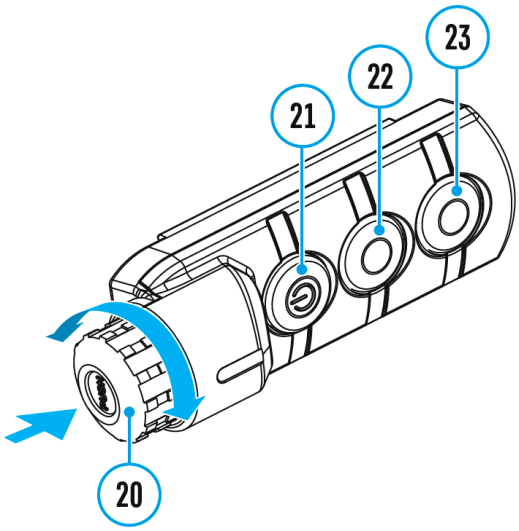

Remote Control Activation

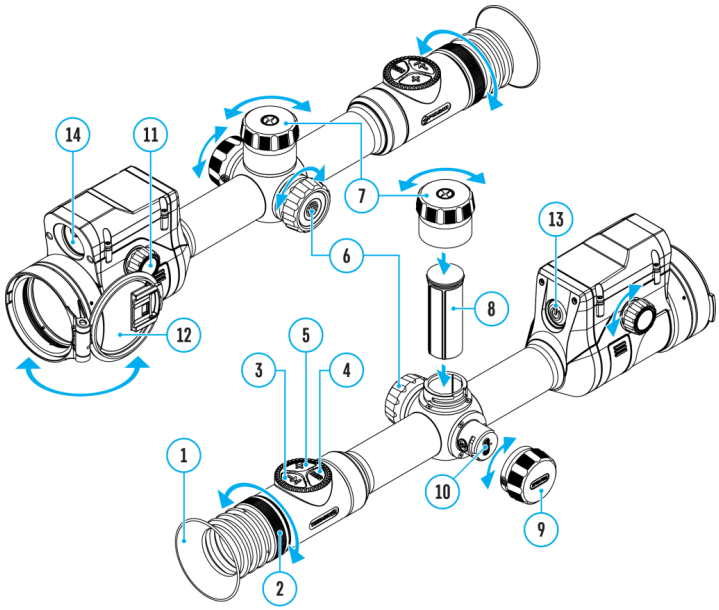

1. Turn on the Bluetooth module (see the **Bluetooth** section).
2. In the **Bluetooth** section of the menu, rotate the controller ring **(6)** to select the **Connect remote control** menu item.
3. Confirm your selection with a short press of the controller ring **(6)** button.
4. Press and hold any button on the Remote Control. The Remote Control is visible in the Bluetooth network and can be connected during this time.
5. Rotate the controller ring **(6)** to select the remote control from the dropdown list that appears.
6. Confirm your selection with a short press of the controller ring **(6)** button.

Notes:

- Once paired, the Remote Control can operate the Pulsar device.
- Going forward, the Remote Control will automatically connect to the paired device when within visible range.
- The name of the remote control and its battery charge level will appear in the list of paired devices at the bottom of the display in the **Bluetooth** section of the menu.

USB Connection

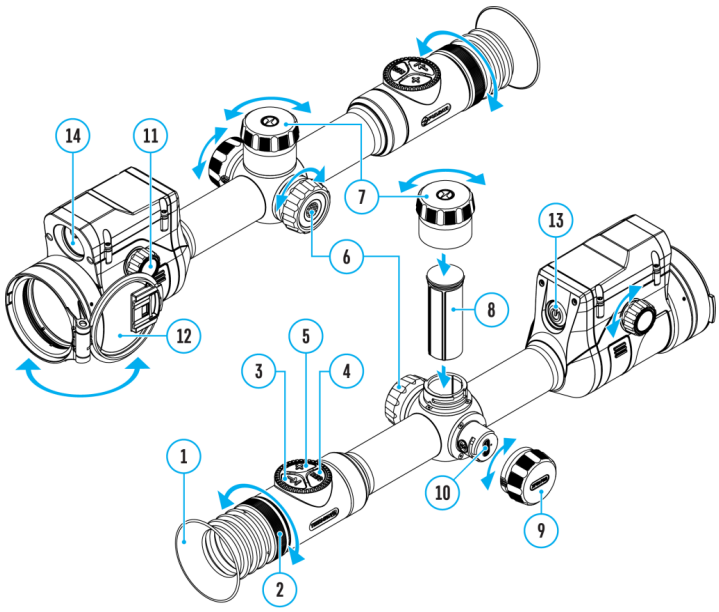

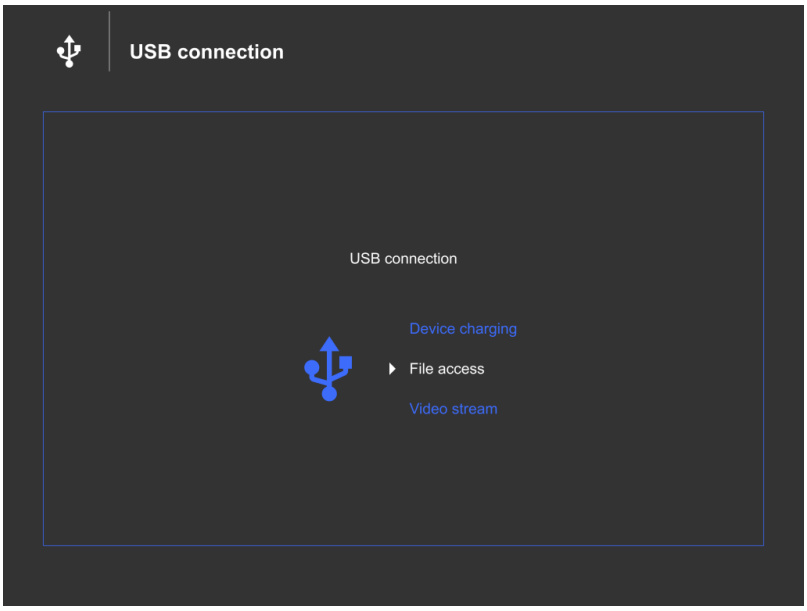

1. Press the **ON/OFF (13)** button briefly to power the riflescope on (the computer will not detect the riflescope if it is turned off).
2. Connect one end of the USB cable to the riflescope USB Type-C port **(10)** and the other one to the port on your computer using a USB Type-A adapter.
3. The riflescope is detected by the computer automatically and no installation of drivers is required.
4. After a few seconds, three connection options appear on the display: **Device charging, File access (external memory)** and **Video stream.**
5. Rotate the controller ring **(6)** to select the connection mode.
6. Press the controller button **(6)** briefly to confirm your selection.

Device charging

- In this mode, a PC/laptop is used as an external power supply. The device continues operating and all functions are available.
- Battery recharge feasibility depends on your computer's USB port.
- When the USB is disconnected from the device when in the **Device charging** mode, the device keeps operating with the Battery Pack if it is available and sufficiently charged.

File access

- In this mode the device is detected by the computer as a flash card. This mode is designed for work with the files saved in the device's memory. The device's functions are not available in this mode; the device turns off automatically.
- If video recording was in progress when the connection was made, recording stops and the video is saved.
- If the device is in **File access** mode and is disconnected from USB, the device will remain on.

Video stream

The device can be connected to PC or smartphone via USB Type-C cable.

The device is recognized as a web camera and accessed via any app that can work with web cameras. Signal from USB has better quality and latency and can be recorded or edited with software on the connected device.

During the video stream it is possible to record the observed picture. Activation of video recording is only available from the device itself by briefly pressing the **REC (4)** button.

NOTE! Feature is supported only with iPhones that have USB Type-C port.

To view the video stream, use any application (on desktop or mobile platforms) that supports the UVC video standard.

Image transfer latency may occur in some applications. To reduce latency, disable the buffer in the application settings.

Software

Stream Vision 2

Install the Stream Vision 2 application to download files, update firmware, control the device by remote control and broadcast images from your device to a smartphone or a tablet via Wi-Fi.

We recommend using the latest version – Stream Vision 2.

Mobile App

STREAM VISION 2

You can find further guidelines on Stream Vision 2 **here.**

Download from Google Play

Download from App Store

Find answers to frequently asked questions about using Stream Vision 2 **here**.

Stream Vision 2 Manual

Android

iOS

Firmware Update

1. Download the free Stream Vision 2 App in **Google Play** or the **App Store**.
2. Connect your Pulsar device to your mobile device (smartphone or tablet).
3. Launch Stream Vision 2 and go to section “Settings”.
4. Select your Pulsar device and press “Check firmware update”.
5. Wait for the update to download and install. Pulsar device will reboot and will be ready to operate.

Important:

- if your Pulsar device is connected to a phone or mobile device, please turn on mobile data transfer (GPRS/3G/4G) to download the latest firmware update;
- if your Pulsar device is not connected to your phone or mobile device but is already listed under “My devices” in “Settings”, you may use Wi-Fi to download the latest firmware update.

Find answers to frequently asked questions about using Stream Vision 2 **here**.

Is your firmware up to date?

Click **here** to check the latest firmware for your device.

Maintenance

Technical Maintenance

Maintenance should be carried out at least twice a year and should include the following steps:

- Wipe the exterior surfaces of metal and plastic parts with a cotton cloth. Do not use chemically active substances, solvents, etc. as these will damage the paint.
- Clean the electric contacts of the battery pack and battery slots on the riflescope using a non-greasy organic solvent.
- Recharge the battery if necessary (50%-80% is recommended for normal use).
- Check the lenses of the eyepiece, objective and rangefinder. If necessary, remove dust and sand from the optics (it is preferable to use a non-contact method). Cleaning of the exterior surfaces of the optics should be done with cleaners designed especially for this purpose.

Technical Inspection

It is recommended to inspect your riflescope before each use. Check the following:

- The device should be free of any cracks or deformations.
- The lenses should be free of cracks, grease, dirt or debris.
- The battery level of the device should be full. Electrical sockets should be free of salts, oxidation, or other debris.
- All controls should be responsive.

Troubleshooting

For technical assistance, please submit a request through our Support page.

The device does not turn on

Possible cause
The Battery Pack is empty
Solution
Charge the Battery Pack

Device malfunction

Solution
In case of any malfunctions during operation, try resetting the device by long pressing the ON/OFF button for 10 seconds.

The device does not operate from an external power source

Possible cause
USB cable is damaged.

Solution
Replace USB cable.

Possible cause
The external power supply is discharged.
Solution
Charge the external power supply.

The image is fuzzy. There are distortions in the form of bars of different widths lying in different directions, or dots of different size and brightness.

Possible cause
Calibration is required.
Solution
Perform image calibration according to Calibration Mode section.

Black screen after calibration

Solution
If the image does not clear after calibration, you need to recalibrate.

The reticle is blurred and cannot be focused with the dioptre ring

Possible cause
The dioptre adjustment range is not enough for your eyesight.
Solution
If you wear glasses with a range of -3/+5, keep glasses on when looking through the eyepiece.

Coloured lines appeared on display or image has disappeared

Possible cause
The device was exposed to static electricity during operation.
Solution
After exposure to static electricity, the device may either reboot automatically, or require turning off and on again.

The image is too dark

Possible cause
Brightness or contrast level is too low.
Solution
Adjust the brightness or contrast in the Quick Menu.

The reticle is crisp but an object at least 30 m away is blurry

Possible cause
Dust and condensation are covering the outside or inside optical surfaces.

Solution
Wipe the outer surface of the objective lens with a soft cotton cloth. Dry the riflescope. Let it stand for four hours in a warm room.

Possible cause
The lens is not focused.
Solution
Adjust the image by rotating the lens focus knob.

The point of impact shifts after firing rounds

Possible cause
The riflescope is not mounted securely or the mount was not fixed with thread sealant.
Solution
Check that the riflescope has been securely mounted.
Make sure you are shooting the same cartridge and load as when the weapon was first zeroed.
Be advised that changes in season, time of day and/or changes in temperature may slightly shift your point of impact. Double checking your zero before hunting is recommended.

After zeroing, the aiming reticle moves relative to the centre of the display and the rangefinder reticle

Possible cause
After shooting, the aiming reticle may not be in the centre of the display. This is normal and is not a defect.

The riflescope will not focus

Possible cause
Wrong settings.
Solution
Adjust the riflescope according to the **Powering on and Image Setting** section.
Check the outer surfaces of the objective lenses and eyepiece and, where necessary, wipe away dust, condensation, frost, etc. In cold weather, you can use special anti-fogging coatings (e.g., the same as for corrective glasses).

Smartphone or tablet cannot be connected to the device

Possible cause
Password in the riflescope was changed.
Solution
Delete network and connect again inserting the password saved in the riflescope.

Possible cause
There are too many Wi-Fi networks in the area where the riflescope is located which may cause signal interference.
Solution
To ensure stable Wi-Fi performance, move the riflescope to an area with few or no Wi-Fi networks.
Solution
Switch the device's Wi-Fi bandwidth.

Possible cause
The device has a 5 GHz network enabled, but the smartphone only supports 2.4 GHz.
Solution
Switch the device's Wi-Fi bandwidth to 2.4 GHz.

More information on solving problems with connection to Stream Vision 2 by following the link.

Wi-Fi signal is missing or interrupted

Possible cause
Smartphone or tablet is out of range of a strong Wi-Fi signal. There are obstacles between the device and the smartphone or tablet (e.g., concrete walls).
Solution
Relocate smartphone or tablet into the Wi-Fi signal line of sight.

More information on solving problems with connection to Stream Vision 2 by following the link.

The image of the object being observed is missing

Possible cause
The object is behind glass, which obstructs thermal vision.
Solution
Remove the glass.

Poor image quality / Reduced detection distance

Possible cause
These problems may occur during observation in adverse weather conditions (snow, rain, fog etc.).

There are several light or black dots (pixels) on riflescope's display or microbolometer

Solution
The presence of dots is caused by peculiarities of microbolometer or display production technology and is not a defect.

When the device is used in low temperature conditions the image quality is worse than in positive temperatures

Possible cause
In warm climates, objects in the background of a thermal image heat up differently because of thermal conductivity, generating a high temperature contrast and a sharper thermal image.
In cold climates, objects in the background of a thermal image will cool down to roughly the same temperature, which leads to a greatly reduced temperature contrast and a degraded image quality. This is normal for all thermal imaging devices.

Rangefinder will not measure distance

Possible cause
There is an object in front of the receiver or emitter lens preventing signal transmission.
Solution
Make sure that: the lenses are not blocked by your hand or fingers; the lenses are clean.

Possible cause
The device is not being held steadily when measuring.
Solution
Keep the device steady when measuring.

Possible cause
Distance to the object exceeds 800 m.
Solution
Pick an object at a distance not longer than 800m.

Possible cause
Low reflection ratio (for example, tree leaves).
Solution
Pick an object with higher reflection ratio (see point **Additional Information** in section Laser Rangefinder).

Large measurement error

Possible cause
Inclement weather conditions (rain, mist, snow).

Remote control does not work

Possible cause
The Bluetooth module is not turned on.
Solution
Turn on the Bluetooth module according to the instructions (see the **Bluetooth** section).

Possible cause
The Remote control is not activated.
Solution
Activate the remote control according to instructions (see the **Remote Control Activation** section).

Possible cause
The Remote Control is out of range of the device.
Solution
Return to the device coverage area.

Possible cause
Remote control battery low.
Solution
Install a new CR2032 battery as follows: unscrew the screws on the rear cover of the Remote Control, remove the cover, install a new battery, and screw the cover with screws.

When the device is turned on, the calibration frequency is at first higher, then decreases (if the automatic calibration mode is enabled)

Possible cause

After turning on the device, it takes some time for the sensor temperature to stabilize. This is normal and is not a defect.

Legal Compliances and Disclaimers

Attention! Thermion thermal imaging riflescopes require a license when exported outside your country.

Electromagnetic compatibility. This product complies with the requirements of European standard EN 55032: 2015, Class A.

Caution: operating this product in a residential area may cause radio interference.

Caution: use of controls or adjustments or performance of procedures other than those specified herein may result in hazardous radiation exposure.

Updates of the Product. The manufacturer reserves the right at any time, without mandatory prior notice to the Customer, to make changes to the package contents (subject to the applicable laws, if any), design and characteristics that do not impair the quality of the Product.

Repair. Repair of the product is available within 5 years after purchase of the product.

Limitation of Liability. Subject to mandatory applicable laws and regulations: manufacturer will not be liable for any claims, actions, suits, proceedings, costs, expenses, damages or liabilities (if any), arising out of the use of this product. Operation and use of the product are the sole responsibility of the Customer. Manufacturer's sole undertaking is limited to providing the product(s) and related services in accordance with the terms and conditions of concluded transactions, including provisions established in warranty. The provision of products sold and services performed by Manufacturer to the Customer shall not be interpreted, construed, or regarded, either expressly or implied, as being for the benefit of or creating any obligation toward any third party (other than Distributor, Dealer, Buyer). Manufacturer's liability hereunder for damages, regardless of the form or action, shall not exceed the fees or other charges paid to Manufacturer for the product(s) and/or service(s).

MANUFACTURER WILL NOT BE LIABLE FOR LOST REVENUES OR INDIRECT, SPECIAL, INCIDENTAL, CONSEQUENTIAL, EXEMPLARY, OR PUNITIVE DAMAGES, EVEN IF THE MANUFACTURER KNEW OR SHOULD HAVE KNOWN THAT SUCH DAMAGES WERE POSSIBLE AND EVEN IF DIRECT DAMAGES DO NOT SATISFY A REMEDY.